City Of
JAMESTOWN
NORTH DAKOTA

STANDARD SPECIFICATIONS

2020

I hereby certify that this plan, specification, or report was prepared by me or under my direct supervision and that I am a duly Registered Professional Engineer under the laws of the State of North Dakota. Travis Dillman, PE Date: 3/10/2020	TRAVIS DILLMAN REGISTERED PROFESSIONAL ENGINEER PE 4790 NORTH DAKOTA 3/10/2020

SPECIFICATION # _____

SECTION INDEX

SECTION 1. INFORMATION FOR BIDDERS	**IB (1-6)**
SECTION 2. GENERAL CONDITIONS	**GC (1-16)**
SECTION 3. SPECIAL CONDITIONS	**SC (1-3)**
SECTION 4. CONSTRUCTION SPECIFICATIONS	**C-1 TO C-16 (1-4)**
SECTION 5. SPECIFICATION DETAILS	**C-3-A TO C-10-B**

THIS PAGE INTENTIONALLY LEFT BLANK

Section 1: INFORMATION FOR BIDDERS

INDEX

1.	PRINTED PROPOSAL FORMS	IB (1)
2.	VARIATION IN ESTIMATED QUANTITIES	IB (1)
3.	INTERPRETATION OF CONTRACT DOCUMENTS	IB (1)
4.	BID GUARANTEE	IB (2)
5.	SIGNING OF PROPOSALS	IB (2)
6.	DELIVERY OF PROPOSALS	IB (2)
7.	OPENING OF PROPOSALS	IB (3)
8.	IRREGULAR PROPOSALS	IB (3)
9.	DISQUALIFICATION OF BIDDERS	IB (3)
10.	AWARD OF CONTRACTS	IB (3)
11.	LOWEST RESPONSIBLE BIDDER	IB (4)
12.	ACCEPTANCE OF PROPOSALS AND ITS EFFECTS	IB (4)
13.	TIME FOR EXECUTING CONTRACT AND DAMAGES FOR FAILURE TO EXECUTE	IB (5)
14.	PERFORMANCE / PAYMENT BOND	IB (5)
15.	BOND SUFFICIENCY	IB (6)
16.	ENGINEER – CONTRACTOR CONFERENCE	IB (6)
17.	BIDDER'S PARTICIPATION IN THE CONTRACT	IB (6)

THIS PAGE INTENTIONALLY LEFT BLANK

INFORMATION FOR BIDDERS

1. PRINTED PROPOSAL FORMS

The bidder will be furnished proposal forms by the engineer, which will state the location and description of the proposed work to be performed and which will show the estimated of the various quantities of work to be performed and materials to be furnished, the completion schedule, the amount of the proposal guarantee, which must accompany the proposal, and the date and time of the opening of the proposals. The proposal forms will state any special provisions or requirements which vary from or are not contained in these **SPECIFICATIONS.** At the option of the owner, a **BIDDER'S STATEMENT FORM** and a **BIDDER'S PARTICIPATION FORM** that require information on past experience, available capital, available equipment, available personnel, information that describes in detail the participation level of the bidder in the contract shall be included. All papers bound with or attached to the proposal forms are a necessary part thereof and must not be detached.

2. VARIATION IN ESTIMATED QUANTITIES

The contractor may reasonably expect a variation in the estimated quantities from the actual quantities and no claims will be allowed for anticipated profits, for loss of profits or for damage of any sort because of a difference between the estimate of any **MAJOR** or **MINOR ITEMS** and the amount of the said **MAJOR** or **MINOR ITEMS** actually required. **MAJOR** and **MINOR ITEMS** are as defined in the **GENERAL CONDITIONS, 31. CHANGES IN THE WORK**, page **GC (10)** of these **SPECIFICATIONS**. The owner reserves the right to eliminate items from the proposal when such is deemed in his best interest.

3. INTERPRETATION OF CONTRACT DOCUMENTS

If any person contemplation submitting a bid for the contract is in doubt as to the true meaning of any of the contract documents, he may submit to the engineer a written request for an interpretation thereof. The person submitting the request will be responsible for its prompt delivery. Any interpretation of the contract documents will be made only by addendum. The owner will not be responsible for any other explanations or interpretations of the contract documents.

4. BID GUARANTEE

A. For paving, curb & gutter, sidewalk, utility and building projects each bid shall be accompanied by:
   1. A bidder's bond in the amount of 5% of the bid made payable to the City of Jamestown, Jamestown, North Dakota (NDCC 48-01.2-01).

B. For service connection projects, each bid shall be accompanied by a certified check or cashier's check in the amount of $500.00 payable to the City of Jamestown. (NDCC 40-28-07)

C. All such checks and bidder's bonds will be returned to the respective unsuccessful bidders within ten (10) days after the award is made, except those the owner elects to hold until the successful bidders has executed the contract. Thereafter all checks will be returned within ten (10) days.

D. Bid bonds must be executed by a principal. Signatures by other than a president, vice president, or CEO, must be accompanied by sufficient evidence (duly executed meeting minutes, resolution, power of attorney, etc) to indicate that the signatory has the authority to bind the company or organization.

5. SIGNING OF PROPOSALS

If the proposal is made by an individual, his name and post office address must be shown and the proposal must be signed. If made by a firm or partnership, the name and post office address of each member of the firm or partnership must be shown and the proposal sign by an authorized member of the firm or partnership. If made by a corporation, the person signing the proposal must show the name of the State under the law if which the corporation was chartered and the names, titles, and business addresses of the president, secretary, and treasurer, and signed by a corporation officer.

6. DELIVERY OF PROPOSALS

All bids must be placed in a sealed envelope upon the outside of which there is disclosed the following information:

A. The work covered by the bid.
B. The class of North Dakota contractor's license held by the bidder.
C. The number of the bidder's North Dakota contractors license
D. The name of the person, firm, or corporation submitting the bid.
E. The date on which the bidder's North Dakota contractors license was issued or renewed

Proposals may be mailed to the City Administrator or submitted to the City Administrator, in person. No bids will be received after the time set for opening them. A bidder may withdraw his proposal without prejudice to himself, any time before the bid opening.

7. OPENING OF PROPOSALS

Proposals will be opened publicly and read by the City Officials at the time and date set in the **'ADVERTISEMENT FOR BIDS'** or **'NOTICE TO CONTRACTORS'**. Bidders or their authorized agents are invited to be present and are permitted to examine any bid after opening.

8. IRREGULAR PROPOSALS

Proposals may be rejected if they show any omission, alteration of form, additions not called for, conditional alternate bids, or irregularities of any kind which may tend to make the proposal indefinite or ambiguous as to its meaning.

9. DISQUALIFICATION OF BIDDERS

Any or all proposals will be rejected if there is a reason for believing that collusion exists among the bidders and all participants in such collusion will not be considered in future proposals for the same work. Proposals in which the prices obviously are unbalanced as determined by the engineer will be rejected. No contract will be awarded except to responsible bidders capable of performing the class of work contemplated. The bidder will be disqualified if a **BIDDER'S STATEMENT FORM** and /or **BIDDER'S PARTICIPATION FORM** are included in the proposal and the bidder fails to provide the information requested by said forms.

10. AWARD OF CONTRACTS

A. Any or all bids may be rejected and /or any informalities in bids may be waived at the option of the owner
B. The award of the contract is contingent upon securing an acceptable bid which will fall within the amount of funds available for construction of the project.
C. The contract will be awarded to the lowest responsible bidder, as per **11. LOWEST RESPONSIBLE BIDDER**, **IB (4)**, of these specifications.

11. LOWEST RESPONSIBLE BIDDER

In determining **LOWEST RESPONSIBLE BIDDER**, the owner **SHALL** and **WILL** consider the following factors, in addition to price. None of the following factors are necessarily individually exclusive.

A. The contents and nature of the information provided in the **BIDDER'S STATEMENT FORM** and /or the **BIDDER'S PARTICIPATION FORM**, if attached to the proposal forms.
B. The ability, capacity and skill of the bidder to perform the contract or provide the services required.
C. Whether the bidder can perform the contract or provide the service promptly, or within the time specified, without delay or interference.
D. The character, integrity, reputation, judgment, experience and efficiency of the bidder.
E. The quality of performance of previous contracts or service.
F. The previous and /or existing compliance by the bidder with laws, ordinances, and performance relating to previous contracts or services.
G. The sufficiency of the financial resources and ability of the bidder to perform the contract or provide the service.
H. The quality, availability and adaptability of the supplies, or contractual services to the particular use required.
I. The ability of the bidder to provide future maintenance and service for the use of the subject of the contract.
J. The number and scope of conditions attached to the bid.

12. ACCEPTANCE OF PROPOSALS AND ITS EFFECTS

On, or before, the next regularly scheduled council meeting after the opening of the proposals the owner will act upon them. The acceptance of proposal will be a notice in writing signed by a duly authorized representative of the owner, and no other act of the owner shall be necessary to constitute acceptance of a proposal. The acceptance of a proposal shall bind the successful bidder to execute the required contract.

13. TIME FOR EXECUTING CONTRACT AND DAMAGES FOR FAILURE TO EXECUTE

Any bidder whose proposal shall be accepted will be required to execute the contract and furnish contractor's bond required under paragraph 14 hereof, within ten (10) days after notice that the contract has been awarded to him. Failure to do so shall constitute a breach of the agreement effected by the acceptance of the proposal.

The damages to the owner for such breach will include loss from interference with his construction program and other items whose accurate amount will be difficult or impossible to compute. The amount of the bidder's check or bond accompanying the proposal for such bidder shall be retained by the owner as liquidated damages for such breach. The City Council shall be authorized, the same as if the bond or bid contained an expressed stipulation to that effect, to cause such work to be done, or complete the work, or contract with some other contractor to do or complete the difference between actual cost to the city of such improvements and the sum which it would cost if the defaulting bidder complied with his bid.

14. PERFORMANCE BOND

The successful bidder shall within the time fixed by the City Council for executing the contract, file with the City Administrator, a performance bond in a sum equal to the full amount of the Contract. Such performance bond shall be executed by the bidder or contractor as principle and a surety company, authorized to do business in the State of North Dakota and in a form satisfactory to the City Attorney of the City of Jamestown. Free holder personal surety bonds shall not be accepted.

Such bond shall be made payable to the City, and shall be conditioned that the contractor will well and faithfully perform the work bid for in accordance with the terms of and within the time provided for in such contract, and pursuant to the plans and specifications and proposal for such work on file in the City Administrator's Office and pay for all labor and materials used in such work, all taxes of any nature, worker's compensation charges, and all other obligations arising out of the contractor's performance of the contract. In case of default on the part of the bidder or contractor to perform such work as provided in the contract, the sum named in the bond shall be taken and held to be fixed and liquidated damages in favor of the city and the full amount thereof may be recovered from said bidder and his sureties in an action by the city against them on said bond. **In addition, said surety company shall not hire the same contractor to complete the work and shall not hire any of the contractor's sub-contractors to complete the work without the specific permission of the owner in the case of default on the part of the contractor.**

15. BOND SUFFICIENCY

The sufficiency of any bond filed by the bidder shall be determined by the City Council at the time of considering bids. If the council shall at any time deem the bond of a contractor insufficient either in the form or as to sureties it may require the successful bidder or contractor to furnish a new bond to be approved aby the City Council within such reasonable time as the council may fix it; and if the bidder or contractor shall fail to furnish such new bond within the required time after notice for him to do so, his contract may be canceled and in that event the contractor's bond shall be liable the same as if the contractor had failed to perform his contract.

16. ENGINEER-CONTRACTOR CONFERENCE

Approximately two (2) week prior to the contractor beginning work on a project, the contractor shall notify the engineer that the contractor is ready for a pre-construction conference. The purpose of this meeting will be to inform the engineer how the contractor plans to proceed with the work, what sub-contractors, if any, will be working on the project, and the scheduling of the work. In addition, said pre-construction conference will be used to mutually discuss and /or to remind the contractor of any other requirement of the contract that is deemed by the engineer to be necessary. Failure to discuss at the pre-construction conference any part /portion of the contract does not and will not relieve the contractor of the requirements of the said contract.

17. BIDDER'S PARTICIPATION IN THE CONTRACT

The bidder shall not sublet any portion of the contract without the written consent of the engineer. The maximum percentage that can be sublet shall be 70 percent of the total bid amount. Individual requests for permission to sublet shall be submitted to the owner at the pre-construction conference and shall show all the necessary calculations that indicate that the maximum percentage of sublets is not exceeded.

Section 2: GENERAL CONDITIONS

INDEX

1.	DEFINITIONS	GC (1)
2.	CONTRACTOR'S UNDERSTANDING	GC (2)
3.	INTENT OF DRAWINGS AND SPECIFICATIONS	GC (2)
4.	DRAWINGS AND SPECIFICATIONS	GC (3)
5.	SHOP DRAWINGS	GC (3)
6.	SURVERYS	GC (3)
7.	INSURANCE	GC (4)
8.	PERMITS	GC (4)
9.	LAWS TO BE OBSERVED	GC (4)
10.	ROYALTIES AND PATENTS	GC (4)
11.	INDEMNITY	GC (5)
12.	PROTECTION OF WORK	GC (5)
13.	PROTECTION OF EXISTING UTILITIES	GC (5)
14.	PUBLIC SAFETY AND CONVENIENCE	GC (5)
15.	ACCIDENTS	GC (6)
16.	ASSIGNMENT OF CONTRACT	GC (6)
17.	SUB-CONTRACTS	GC (6)
18.	CONTRACTOR'S RESPONSIBILITY	GC (6)
19.	RIGHTS OF VARIOUS INTERESTS	GC (7)
20.	ENGINEER'S RESPONSIBILITY AND AUTHORITY	GC (7)

21.	INSPECTION OF WORK	GC (7)
22.	CONTRACTOR'S EMPLOYEES	GC (8)
23.	MATERIALS, SERVICES, AND FACILITIES	GC (8)
24.	WORKMANSHIP AND MATERIALS	GC (8)
25.	INSPECTION AND TESTING OF MATERIALS	GC (8)
26.	DEFECTIVE WORK AND MATERIAL	GC (9)
27.	SUSPENSION OF WORK	GC (9)
28.	OWNERS RIGHT TO CORRECT DEFICIENCIES	GC (9)
29.	OWNERS RIGHT TO TERMINATE CONTRACT	GC (10)
30.	REMOVAL OF EQUIPMENT	GC (10)
31.	CHANGES IN THE WORK	GC (10)
32.	EXTRA WORK	GC (11)
33.	OPERATIONS AND STORAGE AREAS	GC (11)
34.	SCHEDULE OF COMPLETION	GC (11)
35.	ORDER OF CONSTRUCTION	GC (11)
36.	EXTENSION OF CONTRACT TIME	GC (12)
37.	USE OF COMPLETED PORTIONS	GC (12)
38.	PROTECTION OF PROPERTY	GC (12)
39.	CORRECTION OF WORK BEFORE FINAL PAYMENT	GC (12)
40.	DEDUCTIONS FOR UNCORRECTED WORK	GC (13)
41.	WORK IN FREEZING WEATHER	GC (13)
42.	CLEANING UP	GC (13)

43.	**RELEASE OF LIENS**	**GC (13)**
44.	**PROGRESS PAYMENTS**	**GC (13)**
45.	**MEASUREMENT OF QUANTITIES**	**GC (14)**
46.	**FINAL PAYMENT**	**GC (14)**
47.	**GUARANTEE**	**GC (14)**
48.	**SAFETY**	**GC (15)**
49.	**TRAFFIC SIGNING REQUIREMENTS**	**GC (15)**
50.	**DISCOVERY OF ARCHAEOLOGICAL AND OTHER HISTORICAL ITEMS**	**GC (15)**
51.	**(OR EQUAL) PROVISIONS**	**GC (16)**

THIS PAGE INTENTIONALLY LEFT BLANK

GENERAL CONDITIONS

1. DEFINITIONS

A. **CONTRACT DOCUMENTS.** The contract inclusively consists of the advertisement, proposal, standard specifications, special conditions and /or provisions, plans & drawings, the contract itself, and any other additions, deletions, and modifications incorporated therein before the execution of the contract.

B. **OWNER** is the City of Jamestown, North Dakota.

C. **ENGINEER** is the City of Jamestown, North Dakota, or his authorized representative.

D. **CONTRACTOR** is the contractor named in the contract documents

E. **PROPOSAL** is the offer of a bidder to perform the work described in the contract documents when made out and submitted on the prescribed proposal form, properly signed and guaranteed.

F. **PROPOSAL GUARANTEE** is the cashier's check and /or bidder's bond accompanying the proposal submitted by the bidder, as a guarantee that the successful bidder will enter into a contract with the owner for construction of the work.

G. **CONTRACT** is the agreement covering the performance of the work described in the contract documents including all the supplemental agreements herein and all general and special provisions pertaining to the work and materials thereof.

H. **CONTRACTOR'S BOND** is the approved form of security furnished by the contractor and his surety as a guarantee of good faith on the part of the contractor to execute the work in accordance with the terms of the contract.

I. **WRITTEN NOTICE** shall be considered as served when delivered in person or sent by certified mail to the contractor at the address shown on the contract or to the superintendent required under paragraph **22. CONTRACTOR'S EMPLOYEES**,

   a. **CONTRACTOR'S SUPERINTENDENT,** page **GC (8)** of these **GENERAL CONDITIONS**

J. **SPECIFICATIONS** shall mean the legal procedural documents general conditions of the contract, together with modifications thereof, and the detailed specification requirements, with all addenda thereto.

K. **DRAWINGS** are all general and detailed official drawings or reproductions of drawings pertaining to the work or to any structure connected therewith, including such working plans as may be furnished or approved by the engineer from time to time as work progresses.

L. **ASTM** is the American Society for Testing Materials

M. **AASHTO** is the American Association of State Highway and Transportation Officials
N. **NDDOT SPECIFICATIONS** is the **NDDOT STANDARD SPECIFICATIONS FOR ROAD AND BRIDGE CONSTRUCTION, VOLUMES 1 & 2, 2014,** and all of the **NDDOT SUPPLEMENTAL SPECIFICATIONS** dated prior to the bid opening
O. **AWWA** is the American Water Works Association
P. **SDR** is the Standard Dimension Rate
Q. **ANSI** is the American National Standard Institute
R. **WW-P** is the Federal Specification Prefix
S. **ADMINISTRATIVE AUTHORITIES** of the City of Jamestown are the City Administrator and /or the City Council

COMPLETION DATE is the time limit for completion of the work and is the date when liquidated damages, as per the **SPECIAL CONDITIONS, 1. LIQUIDATED DAMAGES**, page **SC (1) & SC (2)**, of these **SPECIFICATIONS** begin. Said **COMPLETION DATE** will be defined in the proposal documents and no allowances, extensions, and /or weather related cut-off and start dates will be allowed, unless otherwise stated in the proposal documents

2. CONTRACTOR'S UNDERSTANDING

It is understood and agreed that the contractor has by careful examination, satisfied himself to the nature of the work, the conformation of the ground, the character, quality and quantity of the materials to be encountered, the character of equipment and facilities needed preliminary to and during prosecution of the work, the general and local conditions, and all other matters, which can in any way affect the work under this contract.

No verbal agreement with any officer, agent or employees of the owner, either before or after the execution of the contract, shall effect or modify any of the terms or obligations herein contained.

3. INTENT OF DRAWINGS AND SPECIFICATIONS

The intent of the drawings and specifications is that the contractor furnishes all labor and materials, equipment and transportation necessary for the proper execution of the work unless specifically noted otherwise. The contractor shall do all the work shown on the drawings and described in the specifications and all incidental work considered necessary to complete the project in a substantial and acceptable manner, and to fully complete the work ready for use by the owner.

4. DRAWINGS AND SPECIFICATIONS

A. **COPIES OF DRAWINGS AND SPECIFICATIONS:** The Engineer will furnish to the contractor, free of charge, four (4) copies of **DRAWINGS** and **SPECIFICATIONS** reasonably necessary for execution of the work. All additional copies will be furnished at reproduction cost.
B. **DISCREPANCIES IN DRAWINGS:** Any discrepancies found between the **DRAWINGS** and **SPECIFICATIONS** and site conditions or any errors or omissions in the drawings or specifications shall be immediately reported to the engineer, who shall promptly correct such error or omission in writing. Any work done by the contractor after his discovery of such discrepancies, errors, or omissions shall be done at the contractor's risk
C. **DIMENSIONS:** Written dimensions shall govern over scaled dimensions.
D. DRAWINGS AND SPECIFICATIONS AT JOB SITE: One complete set of all drawings and specifications shall be maintained at the job site and shall be available to the engineer or his representative at all times.

5. SHOP DRAWINGS

A. The contractor shall provide shop drawings, settings, schedules and such other drawings as may be necessary for the prosecution of the work in the shop and in the field as required by the drawings, specifications or engineer's instructions.
B. The contractor shall submit for approval four (4) copies of all the shop drawings and descriptive data as applicable showing all features not fully detailed on the contract plans but essential for a complete coordinate installation.
C. The approval of shop drawings indicates only that the type and kind of equipment, general method of construction and /or detailing is satisfactory but shall not be construed as a complete check. The responsibility rests on the contractor for the proper dimensioning, detailing of connections and incorporating into the work satisfactory material and equipment meeting the requirements of the contract plans and specifications.

6. SURVEYS

The engineer shall develop and make all detail surveys necessary for construction, but the contractor shall assume full responsibility for construction in accordance with established lines and grades.

The contractor shall exercise proper care in the presentation of stakes set for his use by the engineer. If such stakes are injured, lost or removed by the contractor's operations, they shall be reset at his expense.

` The contractor shall protect carefully from disturbances or damage all monuments and property markers until the engineer has witnessed or otherwise referenced their locations and shall not remove them until directed.

7. INSURANCE

The owner **will not** consummate the contract until the City of Jamestown through the offices of the City Administration and /or the City Attorney has approved the items that are listed below, as submitted by the contractor.

The contractor **shall not** commence work under this contract until the requirements of the previous sentence have been met and the contractor **shall not** permit any sub-contractor to commence work on his portion of the work until these same requirements have been met by the sub-contractor.

A. **WORKER'S COMPENSATION, EMPLOYER'S LIABILITY INSURANCE, AND CERTIFICATES OF PAYMENT:** Shall be secured and maintained as required by the State of North Dakota and the City of Jamestown.
B. **PUBLIC LIABILITY, BODILY INJURY, AND PROPERTY DAMAGE:** Injury of one or more persons, and /or property damage: Per accident: $1,000,000.00
C. **AUTOMOBILE AND TRUCK PUBLIC LIABILITY, BODILY INJURY, AND PROPERTY DAMAGE:** Injury of one or more persons, and /or property damage: Per accident: $1,000,000.00

8. PERMITS

All permits and licenses necessary for the prosecution of the work shall be secured and paid for by the contractor.

9. LAWS TO BE OBSERVED

The contractor shall give all notices and comply with all Federal, State, and Local laws, ordinances, rules and regulations bearing on the conduct of the work as drawn and specified. If the contractor performs any work knowing it to be contrary to such laws, ordinances, rules and regulations, and without such notice to the engineer, he shall bear all costs arising therefrom.

10. ROYALITIES AND PATENTS

The contractor shall pay all royalties and license fees. He shall defend all suits or claims for infringement of any patent rights and shall save the owner harmless from loss on account thereof. The owner shall be responsible for all such loss when a particular process or the product of a particular manufacturer or manufacturers is specified, but if

the contractor has information that the process or article specified is an infringement on a patent, he shall be responsible for such loss unless he promptly gives information to the engineer.

11. INDEMNITY

The contractor shall indemnify and save harmless the owner from and against all losses and all claims, demands, payments, suits, actions, recoveries and judgments of every nature and description brought or recovered against him by reason of any omission or act of the contractor, his agents or employees, in the execution of the work or in the guarding of it.

12. PROTECTION OF WORK

The contractor shall, at his own expense, erect and maintain all necessary traffic control devices, take all necessary precautions for the protection of the work and the safety of the public, and will at all times until its completion and final acceptance protect his work, apparatus and material from accidental or other damage and shall make good any damages thus occurring, at his own expense. See Section **49. TRAFFIC SIGNING REQUIREMENTS**, Pages **GC (15)**, for further information

13. PROTECTION OF EXISTING UTILITIES

The contractor, prior to excavation, shall determine the location of all existing utilities within the work area and shall exercise all due precaution to prevent damage thereto during all excavation or back filling operations. It shall be the contractor's responsibility to locate all utility services before any construction can be started. Any utility damaged during construction shall be repaired by the contractor at the contractors own expense. Existing utilities that are shown on the **PLANS** or **DRAWINGS** are to be used by the contractor as general information only and are not to be construed, in any way, as relieving the contractor of any responsibilities outlined in this paragraph.

14. PUBLIC SAFETY AND CONVENIENCE

The contractor shall at all times so conduct his work as to insure the least possible obstruction to traffic and inconvenience to the general public and the residents in the vicinity of the work, and to insure the protection of persons and property in a manner satisfactory to the engineer.

No road or street shall be closed to the public except with the permission of the engineer. Fire hydrants on or adjacent to the work shall be kept accessible to the firefighting equipment at all times. Temporary provisions shall be made by the

contractor to insure the use of sidewalks and the proper functioning of all gutters, sewer inlets, and the drainage ditches, which shall not be obstructed except as approved by the engineer.

15. ACCIDENTS

The contractor shall provide, at the site, such equipment and medical facilities as are necessary to supply first-aid service to anyone who may be injured in connection with the work.

The contractor must promptly report in writing to the engineer all accidents whatsoever arising out of, or in connection with, the performance of the work; which caused death, personal injury, or property damages, giving full details and statements of witnesses. In addition, if death or serious injuries or serious damages are caused, the accident shall be reported immediately by telephone or messenger to the engineer and the owner.

16. ASSIGNMENT OF CONTRACT

The contractor shall not sublet, sell, transfer, assign or otherwise dispose of the contract or any portion thereof, or of his right, title or interest therein, or his obligation thereunder, without written consent of the owner.

17. SUB-CONTRACTS

At the pre-construction conference, the contractor shall submit in writing to the owner for approval of the engineer the names of any sub-contractors proposed for the work. Sub-contractors may not be changed except at the request or with the approval of the engineer. The contractor shall remain responsible to the owner for the acts and omissions of his sub-contractors. The contract documents shall not be construed as creating any contractual relation between any sub-contractor and the owner. The contractor shall bind every sub-contractor by the terms of the contract documents.

If the owner is given any indication by the contractor that hidden participant(s) in the contract exists in any form before the pre-construction conference, the requirements of **7. INSURANCE** of these **SPECIFICATIONS**, page **GC (4)**, will be required of all such hidden participant(s).

18. CONTRACTOR'S RESPONSIBILITY

The contractor shall have charge of and be responsible for the entire work under this contract until the completion, and any imperfect or unfaithful work which may be discovered any time before the final acceptance of the work embraced in this contract shall be corrected immediately upon request of the owner or engineer.

19. RIGHTS OF VARIOUS INTERESTS

Wherever work being done by the owner's employees or by other contractors is continuous to work covered by this contract, the respective rights of the various interests involved shall be established by the engineer, to secure the completion of the various portions of the work in general harmony.

20. ENGINEER'S RESPONSIBILITY AND AUTHORITY

The engineer will require, on the owner's behalf, that the construction be performed by the contractor in accordance with the plans and specifications. The engineer has the authority on behalf of the owner to require proper prosecution of the installation of the work to the extent that the forces of labor may be increased or decreased by the engineers order to insure the execution of the contract in the time and manner prescribed, with no additional cost to the owner.

The engineer within a reasonable time after submittal, will make decisions in writing on any claims between the contractor and owner, such decisions shall be regarded as final, unless reviewed and changed by the Administrative Authorities of the City of Jamestown.

21. INSPECTION OF WORK

A. Inspectors may be stationed on the work to report to the engineer as to the progress of the work, the manner in which it is being performed, and able to report whenever it appears that materials furnished and work performed by the contractor fail to fulfill the requirements of the specifications and contract. The inspector may direct the attention of the contractor to such failure or infringement but such inspection shall not relieve the contractor from any obligations to furnish acceptable materials or to provide completed construction that is satisfactory in every particular.
B. In case of any dispute arising between the inspector and the contractor as to material furnished or the manner of performing the work, the inspector shall have the authority to reject materials, and /or suspend the work until the questions and issues can be referred to and decided by the engineer. Inspectors are not authorized to revoke, alter, enlarge, relay, or release any requirements of these specifications, nor to issue instructions contrary to the plans and specifications. Inspectors shall in no case act as management of the work by the contractor.

22. CONTRACTOR'S EMPLOYEES

A. **CONTRACTOR'S SUPERINTENDENT:** A qualified superintendent who is acceptable to the engineer shall be maintained on the work and give efficient supervision to the work until its completion. The superintendent shall have full authority to act in behalf of the contractor, and all directions given to the superintendent shall be considered given to the contractor. The contractor shall remove from the project any superintendent unsatisfactory to the engineer.
B. **CHARACTER OF WORKMEN:** Any foreman or workman employed by the contractor, who in opinion of the engineer, does not perform his work in a skillful manner, or appears to be incompetent or incorrigible shall be dismissed by the contractor or his representatives when requested by the engineer and such persons shall not again be permitted to return to the work without the written consent of the engineer.

23. MATERIALS, SERVICES AND FACILITIES

It is understood that, except as otherwise specifically stated in the contract documents, the contractor shall provide and pay for all materials, labor, mechanics for labor, tools, equipment, equipment rental, water, light, power, transportation, superintendent, temporary construction of every nature whatsoever necessary to execute complete and deliver the work within the specified time.

24. WORKMANSHIP AND MATERIALS

All work done and all material and equipment furnished by the contractor shall strictly conform to the plans and specifications. Competent labor, mechanics, and tradesmen shall be used on all work.

The acceptance at any time of the materials by or in behalf of the owner shall not be a bar to future rejection if they are subsequently found to be defective or inferior in quality or uniformity of the material specified.

Whenever any material shall be condemned by the engineer such material shall be removed at once from the line of work at the contractor's expense, and shall not be brought back.

25. INSPECTION AND TESTING OF MATERIALS

A. During the progress of the work, it shall be subject to the inspection of the engineer, and the contractor shall afford every reasonable facility and the assistance to the engineer to make such inspection thorough and intelligent.
B. The fact that the engineer is present at the construction site(s) shall not be taken as an acceptance of the contractor's work or any part of it.

C. The contractor shall notify the engineer upon completion of his contract and the work shall be given final inspection and test by the engineer and if all parts of the work are acceptable and comply with the intent of the plans and specifications, a recommendation of final acceptance will be made by the engineer to the owner.
D. The contractor shall submit to the engineer from time to time, or when called upon to do so, and without charge, samples or specifications of materials he proposes to use.
E. Contractor shall furnish tests and reports on tests of all materials called for in the specifications. The testing laboratory will be selected by the engineer and the contractor shall pay the cost of the tests. All tests shall be in accordance with the standards of the **ASTM, AASHTO,** and other recognized standards.

26. DEFECTIVE WORK AND MATERIAL

All materials which do not conform to requirements of the contract documents, are not equal to samples approved by the engineer, or are in any way unsatisfactory or unsuited to the purpose for which they are intended shall be rejected. Any defective work whether the result of poor workmanship, use of defective materials, damage through carelessness or any other cause shall be removed within ten (10) days after written notice is given by the engineer, and the work shall be re-executed by the contractor. The fact that the engineer may have previously overlooked such defective work shall not constitute an acceptance of any part of it.

27. SUSPENSION OF WORK

The engineer shall have the authority to suspend the work at **no cost** to the **OWNER**, wholly or in part, for such period or periods, as he may deem unnecessary, due to unsuitable weather, any other conditions as are considered unfavorable for prosecution of the work; failure on the part of the contractor to supply materials meeting the requirements of the specifications; failure on the part of the contractor to perform the work in a satisfactory manner; or any other failure on the part of the contractor to carry out the provisions of the contract. In addition, the contractor shall not suspend operation without the engineer's permission.

28. OWNER'S RIGHT TO CORRECT DEFICIENCIES

If the contractor shall neglect to prosecute the work properly or fail to perform any provision of this contract, the owner, after three (3) days written notice to the contractor may, without prejudice to any other remedy he may have, correct such deficiencies and may deduct the cost thereof from the payment then or thereafter due to contractor.

29. OWNER'S RIGHT TO TERMINATE CONTRACT

The owner shall have the right to terminate the employment of the contract after giving seven (7) days written notice of termination to the contractor in the event of any default by the contractor and upon receiving written notice from the engineer certifying cause for such action.

In the even if such termination, the owner may take possession of the work and of all materials, tools, and equipment thereon and may finish the work by whatever method and means he may select. In such a case, the contractor shall not be entitled to receive any further payment until the work is finished. If the unpaid balance of the contract price shall exceed the expense of finishing the work, including compensation for additional managerial and administrative services, such excess shall be paid to the contractor. If such expense shall exceed such unpaid balance, the contractor shall pay the difference to the owner.

It shall be considered a default by the contractor whenever he shall:

A. Undergo voluntary or involuntary bankruptcy, become insolvent, or assign his assets for the benefit of his creditor.
B. Disregard or violate any provisions of the contract documents or engineer's instructions, or fail to prosecute the work according to the agreed schedule of completion, including extensions thereof.
C. Fail to provide a qualified superintendent, competent workmen or sub-contractor, or proper materials, or fail to make prompt payment for said materials.

30. REMOVAL OF EQUIPMENT

At the termination of this contract, or in the case of annulment of the contract before completion, the contractor, if notified to do so by the owner, shall promptly remove any part or all of his equipment and supplies from the property of the owner. Should the contractor fail to remove such equipment and supplies, the owner shall have the right to remove them at the contractor's expense.

31. CHANGES IN THE WORK

The owner may, as the need arises, order changes in the work through additions, deletions, or modifications without invalidating the contract. The time of completion may be adjusted at the time of ordering such changes in the work, if appropriate. The value of such additions, deletions, or modifications shall be determined by the unit prices in the contract, when the cost of said additions, deletions, or modifications, on a total contract basis, does not exceed 25 percent of each **MAJOR ITEM**, as defined below.

No adjustment of unit price for such additions, deletions, or modifications will be allowed for **MINOR ITEMS** under any circumstances, as defined below

D. **MAJOR ITEM** is defined as a contract item having a value in excess of 5 percent of the contract amount, on a total contract basis.
E. **MINOR ITEM** is defined as a contract item that does not have a value in excess of 5 percent of the contract amount, on a total contract basis.

32. EXTRA WORK

A. If any work should be required for which no unit price for the supplying of material or the performance of such work is provided in the proposal, it shall be classified as '**EXTRA WORK**'. No such extra work will be done without written orders from the engineer or his specially authorized representative, placed in charge of the work. In case such extra work becomes necessary, it shall be done by the contractor, if so ordered, and shall be paid for by the city at a price which shall be agreed upon, in writing, between the engineer and the contractor, or on the basis of actual cost, plus fifteen (15) percent; but no extra work will be paid for unless ordered by the engineer at the time undertaken and no office expense, overhead expense, carrying expense, or charge for use of tools shall be included in such actual cost.

33. OPERATIONS AND STORAGE AREAS

B. All operations of the contractor, including storage of materials, shall be confined to areas authorized by the owner. Any additional land and access thereto not shown on the drawings that may be required for temporary construction facilities or for storage of materials shall be provided by the contractor with no liability to the owner.

34. SCHEDULE OF COMPLETION

C. The contractor shall submit at such times as may reasonably be requested by the engineer, schedules which shall show the order in which the contractor proposes to carry on the work, with dates at which the contractor will start the several parts of work, and estimated dates of completion of the several parts.

35. ORDER OF CONSTRUCTION

D. The engineer shall have control of the order in which the various parts of the construction work are to be performed. The order of work as determined by the contractor will be followed except where the engineer determines that such order would not be to the best interest of the owner or the general public.

36. EXTENSION OF CONTRACT TIME

A. Any requests for an **EXTENSION OF CONTRACT TIME** shall be addressed and determined by the engineer according to applicable portions of **SECTION 108.06, DETERMINATIONS OF AND EXTENSIONS TO THE CONTRACT TIME, NDDOT SPECIFICATIONS** and the decision of the engineer shall be final. An **ACT OF GOD** is defined as an unforeseeable act, event, or happening resulting from natural causes such as earthquake, tornado, or other cataclysmic phenomena.

B. All contracts with the City of Jamestown are **COMPLETION DATE CONTRACTS** without a stated minimum number of working days for the performance of the work. Accordingly, adverse weather will not be considered a basis for extension of the completion date.

37. USE OF COMPLETED PORTIONS

The owner shall have the right to take possession of and use any completed or partially completed portions of the work, notwithstanding that the time for completing the entire work or such portions may not have expired. If such prior use increases the cost of or delays the completion of uncompleted work or causes redoing of completed work, the contractor shall be entitled such extra compensations, or extension of time or both, as the engineer may determine. Such use of completed or partially completed portions of the work shall not affect the date of final acceptance as per Section **47. GUARANTEE**, pages **GC (14)** of these **SPECIFICATIONS**.

38. PROTECTION OF PROPERTY

The contractor shall, at his own expense, protect by falsework, braces, shoring or other effective means, all buildings, walls, fences, and other property along his line of work or affected directly by his work, against all damage and shall repair or repay the injured owners for such damage.

39. CORRECTIONS OF WORK BEFORE FINAL PAYMENT

The contractor shall promptly remove from the premises all materials condemned by the engineer as failing to conform to the contract, whether incorporated in the work or not, and the contractor shall promptly replace and re-execute his own work in accordance with the contract and without expense to the owner and shall bear the expense of making good all work to the contractor destroyed or damaged by such removal or replacement.

40. DEDUCTION FOR UNCORRECTED WORK

If the engineer deems it necessary to correct work injured or work not in accordance with the contract, an equitable deduction from the contract price shall be made.

41. WORK IN FREEZING WEATHER

Work may not continue in freezing weather, unless specifically authorized in writing by the engineer.

42. CLEANING UP

The contractor must keep all streets, alleys and sidewalks as free from material and debris as the character of the work will permit, and upon completion of any part of the work, must within reasonable time, remove all surplus material and debris, and leave right-of-way in acceptable conditions.

Failure to comply with this provision after due and proper notice has been given by the owner, will be sufficient grounds for the owner to proceed to clean up such material and debris and make such repairs, charging same to the contractor, who hereby agrees to the provisions as above set forth.

43. RELEASE OF LIENS

The contractor shall deliver to the owner a complete release of all liens arising out of this contract before the retained percentage or before the final payment is paid. If any lien remains unsatisfied after all payments are made, the contractor shall refund to the owner such amounts as the owner may have been compelled to pay in discharging such liens including all costs and a reasonable attorney's fee.

44. PROGRESS PAYMENTS

So long as the work herein contracted for is carried on in accordance with the provisions of the contract, the engineer, or his representative will prepare an estimate on or before the 25th day of the month for work performed prior to said date. Progress payments in the amount of 90% of the estimate until such time as the project is 50% complete, with no additional retainage on estimates during the continuance of the contract. Payment will be made to the contractor in cash within approximately thirty (30) days after preparation of the partial estimate by the engineer and approval of same by the owner. The owner may at all times reserve and retain out of said payment all sums it may be authorized to reserve or retain.

45. MEASUREMENT OF QUANTITIES

The quantities of work performed will be computer by the engineer on the basis of measurements taken by the engineer, or his assistants, and these measurements shall be final and binding.

All work computed under the contract shall be measured by the engineer according to the United States Standard Measurements and Weights. Measurements for the various items will be made as provided in the specifications.

46. FINAL PAYMENT

The engineer will, as soon as practical, after the completion and final acceptance of the work, make a final estimate of the amount of work done under the contract. This estimate shall be based on **'AS BUILT'** measurements made by the engineer, and based on unit prices in the proposal plus all approved additions less all approved deductions and less previous payments made.

47. GUARANTEE

The contractor guarantees all work constructed under the contract for a period of one (1) year from the date of final acceptance, against defects in material and workmanship. He shall bear the entire cost and expense of all repairs which may, from any imperfection in work or material become necessary within that time.

If at any time within the period of guarantee, any of the work included in the guarantee shall, in the judgment of the engineer, require any repair or reconstruction, he shall notify the contractor to make the repairs required. Upon receipt of this notice, the contractor shall proceed with such repairs and shall complete the same within a reasonable time.

If the contractor shall neglect or fail to proceed with the repairs within twenty (20) days or if, in the opinion of the engineer, the repairs do not admit of sufficient delay to issue said notice and to await the action of the contractor, then the owner shall have the right to cause such repairs to be made and the cost shall be paid by the contractor. The liability of the bond given to secure the faithful performance of the contract shall continue during the full guarantee period.

At the expiration of the guarantee period, the contractor and his surety shall be released from further obligation under this contract, providing the engineer will certify to the owner that the work performed under this contract is in good and proper condition at the time.

48. SAFETY

The contractor and sub-contractors shall perform the work in compliance with the latest North Dakota Safety Code adopted by the North Dakota Worker's Compensation Bureau.

49. TRAFFIC SIGNING REQUIREMENTS

The contractor and /or sub-contractor shall submit a **TRAFFIC CONTROL PLAN** to the engineer, at the pre-construction conference, for consideration of approval and will accordingly erect and maintain all necessary traffic control devices at the construction site in compliance with **SECTION 704.02 EQUIPMENT, & SECTION 704.03 MATERIALS, & 704.04 CONSTRUCTION REQUIREMENTS, NDDOT SPECIFICATIONS.**

The City of Jamestown Sign Division of the Street Department may be available to the contractor to determine signing requirements, however, any such assistance by the said Sign Division will in no way relieve the contractor of his responsibility to sign according to the manual described above.

Existing signs of any type that interfere with construction shall be removed and replaced in the same location by the contractor, at no cost to the owner, unless otherwise noted.

50. DISCOVERY OF ARCHAEOLOGICAL AND OTHER HISTORICAL ITEMS

In the event of an archaeological find during any phase of construction, the following procedure will be followed:

A. Construction shall be halted, with as little disruption to the archaeological site as possible
B. The contractor shall notify the owner, who shall contact the State Historic Preservation Office.
C. The State Historic Preservation Officer may decide to have an archaeologist inspect the site and make recommendations about the steps needed to protect the site before construction is resumed.
D. Any claim made by the contractor for down time or additional work required by the State Historic Preservation Officer shall be classified as **32. EXTRA WORK,** as indicated on page **GC (11).**
E. Should any artifacts, housing sites, etc., be uncovered, the same procedure shall be followed as outlined for an archaeological find.

51. (OR EQUAL) PROVISIONS

The following procedures shall be followed to determine the equivalency of any material that is not directly referred to in these specifications:

A. The contractor shall submit a sample of the proposed product, with all the available literature to the engineer.
B. The engineer will determine equivalency of the proposed product.
C. The decision of the engineer as to equivalency of the proposed product shall be final.
D. Any variation in the design concept of the proposed product, as compared to the listed products, shall be grounds for rejection.
E. Availability of parts, cost of parts, and work involved in replacing said parts, can also be used by the engineer in making his decision as to equivalency.

THIS PAGE INTENTIONALLY LEFT BLANK

Section 3: SPECIAL CONDITIONS

INDEX

1. **LIQUIDATED DAMAGES** **SC (1)**
2. **USE OF FIRE HYDRANTS** **SC (2)**

SPECIAL CONDITIONS

1. LIQUIDATED DAMAGES

The **OWNER** and the **CONTRACTOR** recognize that time is of the essence of the **AGREEMENT**. They further recognize that not only will the **OWNER** suffer financial loss if the **WORK** is not completed within the times specified in the **CONTRACT**, plus any extensions thereof allowed pursuant to the terms of the **CONTRACT**, but also the public of the City of Jamestown, ND, will suffer damages extremely difficult to estimate. Thus the parties recognize the delays, expense and difficulties involved in proving the actual loss and damages suffered by the **OWNER** and by the public of the City of Jamestown, ND, if **any** of the **WORK** is not completed on time. The parties further recognize that the **OWNER** has made a reasonable endeavor to estimate the actual loss and damages which might be occasioned upon the **OWNER** and the public of the City of Jamestown in the event of delay of completion of **any** of the **WORK** by developing the following **SCHEDULE OF GRADUATED LIQUIDATED DAMAGES**. Thus, both parties agree that the amounts of liquidated damages set forth herein to be assessed in the event of delay in completion on **any** of the **WORK** are both reasonable in amount and reasonably related to the actual damages that have occurred upon delay in completion of **any** of the **WORK**. Accordingly, instead of requiring any actual proof of damages in the event that the **CONTRACTOR** shall neglect, refuse, or fail to complete **any** of the **WORK** within the time specified in this **CONTRACT**. The **OWNER** and the **CONTRACTOR** agree that as liquidated damages for delay (and not as a penalty) that the **CONTRACTOR** shall pay the **OWNER** the amount specified in the **SCHEDULE OF GRADUATED LIQUIDATED DAMAGES** for each day that **any** of the **WORK** is not complete. The **OWNER** and the **CONTRACTOR** further agree that the **OWNER** will withhold from any forthcoming pay estimates according to the follow **SCHEDULE OF GRADUATED LIQUIDATED DAMAGES** for each day that expires after the time specified in the **CONTRACT**.

SCHEDULE OF GRADUATED LIQUIDATED DAMAGES
Original Contract

Over-To & Including			Calendar Day
$ 0	-	$ 50,000	200
50,000	-	100,000	350
100,000	-	250,000	700
250,000	-	500,000	900
500,000	-	1,000,000	1,100
1,000,000	-	3,000,000	1,600
3,000,000	-	5,000,000	2,100
5,000,000	-	8,000,000	2,500
8,000,000	-	UP	3,000

Finally, the **OWNER** and the **CONTRACTOR** specifically recognize that the recitals in this paragraph **1. LIQUIDATED DAMAGES** are conclusive presumptions, pursuant to **SECTION 31-11-02** of the **NORTH DAKOTA CENTURY CODE**.

2. USE OF FIRE HYDRANTS

The contractor is required to make special note of the following paragraphs taken from the city ordinances:

30-23. Tampering with mains, hydrants and system

No person shall tamper with, damage, destroy or temporarily place out of service any city water main, gate valve, stopcock, hydrant, or other water systems connection or machinery, or in any manner interfere with the same. No person shall obstruct the access to any stopcock, hydrant or valve connected with any water pipe by any means of timber, brick, building material, or other article, thing or hindrance. No person shall open any hydrant within the city limits without permission from the City Engineer from the City Engineer or Fire Chief. (Ord. No. 1080 9-6-94)

Sec. 1-9. General Penalty; continuing violations

Whenever in this Code or in any ordinance of the city or in any rule or regulation promulgated pursuant thereto any act is prohibited or is made or declared to be unlawful or an offense, or whenever in this Code or any ordinance or in any rule or regulation promulgated pursuant thereto the doing of any act is required or the failure to do any act is declared to be unlawful, where no specific penalty is provided therefor, any persons, upon conviction for the violation of any such provision of this Code or any ordinance or any such rule or regulation shall be punished by a fine not to exceed five hundred dollars ($500.00) or by imprisonment not to exceed thirty (30) days or by both such fine and imprisonment for each such offense; except for every violation of a city ordinance prohibiting shoplifting, vandalism, criminal mischief or malicious mischief, the penalty may not exceed a fine of one thousand dollars ($1,000.00), imprisonment for thirty (30) days, or both such fine and imprisonment. Each day any violation of any provision of this Code or of any ordinance of any such rule or regulation shall continue shall constitute a separate offense except with respect to Section 21-16-17 wherein each time period violation shall constitute a separate and additional parking violation. In the construction and interpretation of this section, the revocation of a license or permit shall not be considered as a recovery or penalty so as to bar any other penalty being enforced. (Ord. No. 523; Ord. No. 587; Ord. No 716; Ord No. 854; Ord. No. 1073, 3-7-94)

The contractor is also required to take special note of the following paragraph A:

A. In order to comply with a Health-Safety Regulation of the North Dakota State Health Department, the City of Jamestown will not allow any person to take water from any fire hydrant, within or outside of the city limits, for any reason whatsoever.

THIS PAGE INTENTIONALLY LEFT BLANK

Section 4: CONSTRUCTION SPECIFICATIONS

All Construction Specifications shall comply with the NDDOT Standard Specifications for Road and Bridge Construction, 2014 addition, except as herein otherwise specified.

INDEX

SECTION C-1	**RESERVED**	**C-1 (1)**
SECTION C-2	**CONSTRUCTION PERMITS**	**C-2 (1)**
SECTION C-3	**PAVEMENT PREPARATION**	**C-3 (1)**
SECTION C-4	**STORM SEWERS**	**C-4 (1 to 2)**
SECTION C-5	**SANITARY SEWERS & SERVICES**	**C-5 (1 to 3)**
SECTION C-6	**WATER MAINS & SERVICES**	**C-6 (1 to 8)**
SECTION C-7	**GRAVEL BASE COURSE**	**C-7 (1)**
SECTION C-8	**CONCRETE, CURB & GUTTER**	**C-8 (1 to 2)**
SECTION C-9	**PRIME COAT, TACK COAT AND SAND SEAL**	**C-9 (1)**
SECTION C-10	**HOT MIX ASPHALT**	**C-10 (1 to 4)**
SECTION C-11	**BITUMINOUS SEAL COAT**	**C-11 (1)**
SECTION C-12	**GROUTED ROCK RIP-RAP**	**C-12 (1)**
SECTION C-13	**SPECIAL PROVISIONS**	**C-13 (1)**
SECTION C-14	**ASPHALT MILLING**	**C-14 (1)**
SECTION C-15	**RUBBERIZED CRACK SEAL**	**C-15 (1)**
SECTION C-16	**MEASUREMENTS AND PAYMENTS**	**C-16 (1 to 4)**

THIS PAGE INTENTIONALLY LEFT BLANK

SECTION C-1

(RESERVED)

This page intentionally left blank.

THIS PAGE INTENTIONALLY LEFT BLANK

SECTION C-2
CONSTRUCTION PERMITS
(RESERVED)

This page intentionally left blank.

THIS PAGE INTENTIONALLY LEFT BLANK

SECTION C-3
PAVEMENT PREPARATION

1. SCOPE

A. This work shall consist of all necessary Excavation, Embankment, Subgrade Preparation, Back Sloping, Sub-Base Reinforcement, and Gravel Base Course for proper pavement grade preparation.

2. DEFINITIONS

A. Excavation and Embankment shall conform to Section 203, NDDOT Specifications, except as otherwise specified herein.

B. Subgrade Preparation shall conform to Section 230, NDDOT Specifications, except as otherwise specified herein.

C. Back Sloping consists of the necessary minor amounts of Excavation and Embankment to provide a level berm behind the Curb, Pavement and Sidewalk.

D. Sub-Base Reinforcement shall conform to Section 230 & 709, NDDOT Specifications.

E. Gravel Base Course shall conform to Section C-7, in the City of Jamestown Standard Specifications.

3. Subgrade Materials

A. Moisture and density controls for the embankment material shall conform to Section 203.04 E.2.a ND T 180 NDDOT Specification.

B. The subgrade shall be compacted as specified in Section 203.04 E.2 “Compaction Control, Type A” NDDOT Specification.

C. Back Sloping shall consist of providing a 2’ wide, level earth berm, if applicable, behind the curb, pavement, and on each side of the sidewalk. The Contractor shall further back slope in a cut section on a 1:1 slope to the existing ground line, and in a fill section on a 3:1 slope down to existing ground line. Compaction in fill areas shall conform to Section 203.04 E.4 “Compaction Control, Type C” NDDOT Specification.

THIS PAGE INTENTIONALLY LEFT BLANK

SECTION C-4

STORM SEWERS

1. SCOPE

A. The work covered by this section shall consist of all necessary construction of storm sewers, manholes, catch basins and other apparatuses and conform to.

2. MATERIALS

A. Pipe and Fittings shall conform to the following NDDOT specifications.
   i. Reinforced concrete culvert, storm and sewer drain pipe – **Section 830.01A.**
   ii. Metallic (zinc or aluminum) coated corrugated steel culverts, storm drains, and under drains – **Section 830.02B**
   iii. Corrugated Polyethylene culverts (12" or smaller)– **Section 830.02C**
   iv. PVC Pipe (12" or smaller) – **Section 830.03**

Use of any other materials shall require written approval of the City Engineer.

B. Manholes, Catch Basins, and Inlets shall conform to **Section 722.01**
C. Exceptions: The following exceptions shall be taken with **Section 722.01**
   i. No Brick or Masonry units shall be accepted
   ii. Catch Basin minimum diameter shall be 30"
   iii. Manholes minimum diameter shall be 48"
   iv. All manhole joints, both body and frame, shall be wrapped with 60mil. rubber jacket.
D. Standardized Materials
   The Materials listed are the standard materials for the City of Jamestown. Other materials may be considered as "or equal" under **Section GC 51**

Manhole Frames

- Neenah Foundry Model R-1733
- Municipal Casting, Inc. Model 301-1"
- Campbell Foundry Co. Model 1009

Manhole Lids

- Neenah Foundry Model Type C
- Municipal Casting, Inc. Model 301A
- Campbell Foundry Co. - 1009

Catch Basin Frames

- Standard: Neenah Foundry Model R-3015 Type R or approved equal
- Type 1: Neenah Foundry Model R-3295 Type L or approved equal
- Type 2: Neenah Foundry Model R-3295-2 Type L or approved equal
- Type 3: Neenah Foundry Model R-3295-3 Type L or approved equal

3. CONSTRUCTION

Construction shall conform to **Section 722 NDDOT SPECIFICATIONS.**

SECTION C-5
SANITARY SEWERS AND SERVICES

1. SCOPE

A. The work covered by this section shall consist of all necessary construction of sanitary sewers, sewer services, man holes, and other apparatuses.

2. MATERIALS

A. Pipe and Fittings shall conform to **Section 724, NDDOT Specifications**

B. Manholes shall conform to **Section 722**

C. Manhole Frames and Lids shall conform to **Section 722**

D. Exceptions: The following exceptions shall be taken with **Section 722 and Section 724**

i. All lids shall have no holes

ii. All manhole Joints both body and frame shall be wrapped with 60mil, rubber jacket

iii. PVC sewer pipe shall be SPR-35

iv. Risers shall be laid on slope not to exceed 1:1 bearing on undisturbed soil

v. Wyes shall be supported with class “B” concrete

vi. Delete steps

vii. All pipe penetrations shall utilize a Neoprene Boot with stainless steel straps

viii. All manhole joints and rings shall be wrapped with exterior self - adhesive HDPE: 6” overlap

E. Standardized Materials

The Materials listed are the standard materials for the City of Jamestown. Other materials may be considered as “or equal” under **Section GC 51**

Manhole Frames

- Neenah Foundry Model R-1733
- Municipal Casting, Inc. Model 301-7”
- Campbell Foundry Co. Model 1009

Manhole Lids

- Neenah Foundry Model Type C
- Municipal Casting, Inc. Model 301A
- Campbell Foundry Co. -1009

3. CONSTRUCTION

Construction shall conform to **Section 724 NDDOT SPECIFICATIONS.**

A. **Exceptions**

i. The leakage outward or inward (exfiltration or infiltration) shall not exceed 200 gallons per inch of pipe diameter per mile per day for any section of the system. If the quantity of infiltration or exfiltration is in excess of the maximum allowable, satisfactory correction shall be made. Both the measurement and the correction shall be at no additional cost to the owner.

ii. **ADDITIONAL PROTECTION REQUIRED**

A. Where water main crosses over an existing or new sewer main.

1. No additional protection needed if water main is at least 3 feet above the sewer and intervening dirt must be left undisturbed.
2. If the crossing is within 3 feet above the sewer main, a full length of water main must be centered over the sewer main.

B. Where water main under an existing or new sewer main.

1. Additional protection shall be provided by centering a full length of water main under the sewer main. All sewer joints located within 10 feet of the crossing shall be able to withstand 25 psi internal pressure.

C. Where both water and sewer are of new construction

1. No additional protection needed if water main crosses at least 5 feet above the sewer.

2. If the water main crosses within 3 to 5 feet above the sewer, a full length of water main shall be centered over the sewer.

3. If the water main crosses within 3 feet above the sewer, a full length of water main shall be centered over the sewer and the sewer joints located within 10 feet of the crossing shall be able to withstand 25 psi internal pressure.

iii. **SEPARATION**

A. Water mains shall be laid at least 10 feet horizontally from any existing or proposed sewer. The distance shall be measured from edge to edge.

THIS PAGE INTENTIONALLY LEFT BLANK

SECTION C-6
WATER MAINS & SERVICES

1. SCOPE

A. The work covered by this section shall consist of all necessary construction of water mains, valves and other apparatuses and conform to.

2. MATERIALS

General: All materials (piping, valves, interior coatings, etc.) that may come into contact with water intended for use in a public water system shall meet American National Standards Institute (ANSI) / National Sanitation Foundation International (NSF) Standard 61. Materials will be considered as meeting this Standard if so certified by the NSF, the Underwriters Laboratories, or other organization accredited by the ANSI to test and certify such materials.

A. **Pipe and Fittings** shall conform to **Section 724, NDDOT Specifications**

B. **Valves & Appurtenances:**

v. **Gate Valves:** The resilient seat valve furnished shall be of a quality equal to AFC Model 2500 Series under the minimum requirements in design, material and workmanship conforming to the latest standards of AWWA C509, 200 PSI pressure class. The metals used shall be in accordance with AWWA and the ASTM Standards. Unless otherwise designated all gate valves shall have non rising stems, O Ring Stem seals, 2" operating nuts and open counter clockwise. They shall be the type that permits repacking under pressure when wide open. All exposed nuts, bolts, springs and washers shall be stainless steel. Gate valves should have the type of joint designed for type of pipe installed. One valve operation wrench of sufficient length for all gate valves installed shall be furnished per project incidental to the bid price for gate valves.

vi. **Butterfly Valve:** When specified, a Butterfly Valve shall be furnished of a quality equal to that manufactured by Henry Pratt Company or equal company under the minimum requirements in design, material and workmanship conforming to the latest standards of AWWA C504. They shall open counter-clockwise and have a joint end designed for the type of pipe installed. All exposed nuts, bolts, springs and washers shall be stainless steel. One valve operation wrench of sufficient length for all butterfly valves installed shall be furnished per project incidental to the bid price for butterfly valves.

vii. **Valve Boxes:** The valve boxes furnished shall be of a quality equal to that manufactured by Tyler Company C860 Series 3 piece or equal with sufficient length to provide eight (8) feet of cover or more if listed on the plans. Covers shall be marked "Water".

viii. **Ductile Iron Fitting:** Ductile iron Fittings shall be in accordance with ANSI/AWWA C110/A21.10 and shall be furnished with Restrained Mechanical Joints in accordance with ANSI/AWWA C153/A21.52 and ANSI/AWWA C 111/A21.11. Ductile Iron Fittings shall have a working pressure of 350 pounds per square inch conforming to ANSI Specifications A21.10. A variation of five (5) percent above or below the specified weight shall be allowed for irregularities in castings. The fittings shall be cement mortar lined with a bituminous seal conforming to the latest ANA/AWWA C104/A21.4 for cement mortar lining. Stainless steel bolts shall be used for all underground installation.

C. **Hydrants:** The Hydrants shall be equipped with breakaway type traffic flanges and two (2) and one half (2½) inch hose connections and one (1) four and one half (4½) inch pumper connection. All hydrants with six (6) inch pipe connections shall have five (5) inch valves. The depth of earth cover over the connecting pipe shall be no less than eight (8) feet. The hydrant nozzle shall be no less than two and one half (2½) feet above existing ground. The Contractor shall supply necessary extensions, which will be incidental to hydrant unit price. The hydrants shall be surrounded by ten (10) cubic feet of pit run gravel so placed that it will readily take up all water from the drip valves. The hydrants shall be set on a concrete pad six (6) inches thick and eighteen (18) inches square.

The hydrants shall have the same thread as hydrants presently being used in the City, except hydrants in new water systems shall have National Standard Threads. One hydrant operating wrench and one hydrant disassembly wrench shall be provided per project, incidental to the price bid for hydrants. Hydrant joint shall be mechanical joint with stainless steel bolts. The hydrants furnished shall be Waterous or approved equal.

WATEROUS PACER – WB 67.5” x 8.6”, W-DD&P, 6038 - 8403

- With 2 – 2 ½” nose nozzles and 1 – 4 ½” pumper nozzles.
- With traffic Flange
- Cover 8’6”
- Mechanical joint with stainless steel bolts

D. **Tapping Valves and Sleeves:** Tapping Valves shall conform to applicable requirements for gate valves. Tapping valves shall be Mueller Company H-667 or approved.

E. **Saddles** shall be as listed below. See Page **GC (16) 51. (OR EQUAL) PROVISIONS** for procedures that could allow other material. Saddles for main above 12" shall not be allowed unless approved by special request.

MAIN SIZE	MUELLER	FORD	POWER SEAL	ROMAC INDUSTRIES
4"	H-13428	Style FS303	Style 3412AS	Style 304/306
6"	H-13431	Style FS303	Style 3412AS	Style 304/306
8"	H-13433	Style FS303	Style 3412AS	Style 304/306
10"	H-13434	Style FS303	Style 3412AS	Style 306
12"	H-13435	Style FS303	Style 3412AS	Style 306

F. **Curb Stops and Boxes** shall include a solid copper disk with brass coupling nut to fit curb stop provided, which shall be installed on the property side of the curb stop. Extension stems for stop operation shall be installed. Such stem to extend to not less than one foot nor more than two feet below the top of the stop box. See Page **GC (16), 51. (OR EQUAL) PROVISIONS** for procedures that could allow other material. Catalog numbers for curb stops and boxes are as follows:

SIZE	MUELLER		MCDONALDS	
	STOPS	BOXES	STOPS	BOXES
1"	H-15219	H-10300	4718	5615
1 ¼"	H-15219	H-10302	4718	5622
1 ½"	H-15219	H-10304	4718	5624
2"	H-15219	H-10304	4718	5625

G. **Corporation stops** shall be Mueller H-15000, Ford 600, or McDonald 4701. See Page **GC (16), 51. (OR EQUAL) PROVISIONS** for procedures that could allow other material.

H. **River Pipe:** Pipe installed by HDD methods shall be polyethylene pipe conforming to the following:

A. HDPE Pipe shall be DR 9-IPS-ASTM 3350 – 82 (PE3408)

Drilling Fluid: The drilling fluid shall be a mixture of water and bentonite clay. Cement or polymer extenders may be used if determined necessary by the Contractor. The bentonite clay shall be high quality Wyoming bentonite primarily consisting of sodium montmorillonite. The drilling fluid

I. and any additives shall be inert and shall contain no materials, which will pose an environmental risk.

J. **Exceptions:** The following exceptions shall be taken with **Section 724**

i. Water main shall be DR 18 CLASS 235 and shall conform to AWWA C900 or C905

ii. Fittings shall be compression

iii. Stainless Steel Bolts shall be used for all underground installations

3. CONSTRUCTION

Construction shall conform to **Section 724 NDDOT SPECIFICATIONS.**

Pressure testing, Disinfection, Flushing and Bacteriological tests shall be applicable to all water mains and service lines (2" and above and all gasketed pipe), including fire suppression lines, up to the point of meter installation or point of entry into the building.

.

A. **Exceptions:**

i. **Concrete Thrust Blocking:** All hydrants, valves and fittings shall be provided with suitable thrust blocking of adequate size to prevent movement when the pipe is under pressure. The blocks shall be placed in a manner acceptable to the ENGINEER and shall allow pipe and fitting joints to be accessible for repair. Concrete thrust blocks may be poured in place if sufficient time is allowed for curing. Concrete thrust blocking for fittings shall be installed as shown on Standard Drawing 2008. Valves and hydrants shall be set on a concrete thrust block having a bearing area equal to a dead end for pipe of the same size.

ii. **Tests:** All ductile iron water main piping shall be tested in accordance with AWWA Specification C 600 after installation. PVC pipe shall be tested in accordance with the manufacturer's recommendations.

Water main shall be pressure tested with water at 150 PSI for one (1) hour. The maximum allowable pressure drop during the test period shall not be greater than five (5) PSI. Flush out the main before the test to remove air and insert taps if necessary to blow off trapped air. All joints shall be carefully examined during the time the

pressure test is being performed and pipe showing visible leakage shall be refitted.

Contractor shall provide all test pumps, test plugs, pipe and gauges, and make all required piping connections. Defective pipe or fittings disclosed during test shall be replaced and test repeated until requirements have been met. Cost of testing shall be incidental to the price bid for water mains.

iii. **Disinfection:**

1. **General:** Disinfecting of water mains shall be done subject to the approval of the ENGINEER and in accordance with AWWA C651, "Disinfecting Water Mains", and these specifications, prior to being placed in service. The interior of all pipe, fittings and appurtenances shall be kept as free as possible from dirt, heavy and foreign particles.

2. **Forms of Chlorine:** The forms of chlorine that may be used, subject to the approval of the ENGINEER, are:

   (a) Liquid chlorine containing 100 percent available chlorine under pressure in steel containers. Shall conform to AWWA B301 and be used only in combination with appropriate gas-flow chlorinators and ejectors.

   (b) Sodium hypochlorite in liquid form containing approximately 5 to 15 percent available chlorine. Shall conform to AWWA B300.

   (c) Calcium hypochlorite in tablet form. Supplier shall provide information on number of 5-g tablets required to provide a minimum concentration of 25 mg/L for commonly used pipe sizes from 2" to 24".

3. **Methods of Chlorination:** Three (3) methods of chlorination may be used. The tablet method gives an average chlorine dose of approximately 25 mg./L; the continuous feed method gives a 24 hour chlorine residual of not less than 10 mg./L; and the slug method gives a three hour exposure of not less than 50 mg./L free chlorine.
   (a) Tablet Method:

   Warning: This procedure must not be used on solvent welded plastic or on screwed joint steel pipe because of the danger of fire or explosion from the reaction of the joint compounds with the calcium hypochlorite. This method may

be used only if the pipes and appurtenances are kept clean and dry during construction.

During Construction, 5-g calcium hypochlorite tablets shall be placed in each section of pipe and also one such tablet shall be placed in each hydrant, hydrant branch and other appurtenance. The number of 5-g tablets for each pipe section shall be as required to provide a minimum chlorine concentration of 25 mg/L. Appendix B provides information on the number of tablets required for commonly used sizes of pipe. Tablets shall be attached to the inside of the pipe by an adhesive such as Permatex No. 1 or equal. There shall be no adhesive on the tablet except on the broad side attached to the surface of the pipe. Attach all the tablets at the inside top of the main, with approximately equal numbers of tablets at each end of a given pipe length. If the tablets are attached before the pipe section is placed in the trench, their position shall be marked on the section so it can be readily determined that the pipe is installed with the tablets at the top.

When installation has been completed, the main shall be filled with water at a rate such that water within the main will flow at a velocity no greater than 1 fps. Precautions shall be taken to assure that air pockets are eliminated. This water shall remain in the pipe for at least 24 hours. If the water temperature is less than 5°C (41°F), the water shall remain in the pipe for at least 48 hours. Valves shall be positioned so that the strong chlorine solution in the main being treated will not flow into water mains in active service.

(a) Continuous Feed Method:

Prior to being chlorinated, the main shall be filled to eliminate air pockets and flushed as heretofore specified.

Water from the existing distribution system or other approved source of supply shall be made to flow at a constant, measured rate into the newly laid water main. At a point not more than 10 feet downstream from the beginning of the new main, water entering the new main shall receive a dose of chlorine fed at a constant rate such that the water will have not less than 25 mg/L free chlorine. To assure that this concentration is provided, measure the chlorine concentration at regular intervals.

During the application of chlorine, valves shall be positioned so that the strong chlorine solution in the main being treated will not flow into water mains in active service. Chlorine application shall not cease until the entire main is filled with heavily chlorinated water. The chlorinated water shall be retained in the main for at least 24 hours, during which time all valves and hydrants in the section treated shall be operated in order to disinfect the appurtenances. At the end of this 24-hour period, the treated water in all portions of the main shall have a residual of not less than 10 mg/L free chlorine.

The preferred equipment for applying liquid chlorine is a solution feed vacuum-operated chlorinator to mix the chlorine gas in solution water, in combination with a booster pump for injecting the chlorine gas solution water into the main to be disinfected. It is recommended that direct feed chlorinators not be used. Hypochlorite solutions may be applied to the water main with a chemical feed pump designed for feeding chlorine solutions.

(b) Slug Method:

Prior to being chlorinated, preliminary flushing of the main shall be performed as specified herein.

Water from the existing distribution system or other approved source shall be made to flow at a constant measured rate into the newly laid water main.

At a point not more than 10 feet downstream from the beginning of the new main, water entering the new main shall receive a dose of chlorine fed at a constant rate such that the water will have not less than 100 mg/L free chlorine. To assure that this concentration is provided, the chlorine concentration shall be measured at regular intervals. The chlorine shall be applied continuously and for a sufficient period to develop a solid column or "slug" or chlorinated water that will, as it moves through the main, expose all interior surfaces to a concentration of approximately 100 mg/L for at least 3 hours.

The free chlorine residual shall be measured in the slug as it moves through the main. If at any time it drops below 50 mg/L the flow shall be stopped, chlorination equipment shall be relocated at the head of the slug, and as flow is resumed, chlorine shall be applied to restore the free chlorine in the slug to not less than 100 mg/L.
As the chlorinated water flows past fittings and valves, related valves and hydrants shall be operated so as to disinfect appurtenances and pipe branches.

(c) **Final Flushing:** After the applicable retention period, the heavily chlorinated water shall be flushed from the main until chlorine measurements show that the concentration in the water leaving the main is no higher than that generally prevailing in the system, or is acceptable for domestic use.

(d) **Bacteriological Tests:** After final flushing and before the water main is placed in service, a sample, or samples, collected from the main(s) shall be tested for turbidity and bacteriological quality and shall show the absence of coliform organisms. At least two samples shall be collected from the new main, the second test taken 24 hours after the first test.

SECTION C-7
GRAVEL BASE COURSE

1. SCOPE

A. The work covered by this section shall consist of all necessary construction of gravel base or gravel surface. Materials are subject to change based on engineer's discretion or otherwise noted.

2. MATERIALS

A. Gravel for Base Course shall conform to Class 5 as specified in Section 816.02, NDDOT Specifications.

B. Gravel for Surface Course shall conform to Class 13 as specified in Section 816.02, NDDOT Specifications, except that portion passing the No. 200 sieve shall be between 5% and 12%.

C. Salvaged Base Gravel shall conform to Section 817, NDDOT Specifications.

3. CONSTRUCTION

A. Construction methods, procedures, and equipment shall conform to Section 302, NDDOT Specifications

THIS PAGE INTENTIONALLY LEFT BLANK

SECTION C-8
CONCRETE, CURB AND GUTTER

1. SCOPE

A. The work covered by this section shall consist of all necessary construction of concrete for Sidewalks, Paving, Curb & Gutter, Valley Gutter, Manholes, Thrust Blocks and other Structures.

2. MATERIALS

A. Concrete shall conform to Section 802, NDDOT Specifications, with size 3 coarse aggregate. Concrete exposed to air or water shall be Class AE. A Mix Design for each concrete mix shall be prepared by an Independent Testing Laboratory using aggregates which are proposed for use on the project. The Mix Design shall be delivered to the Engineer for review at least five (5) days prior to concrete usage. Any cost associated with the Mix Design shall be considered incidental to concrete bid items. All exterior concrete, unless otherwise specified, shall be 4,000 psi mix at 28 days.

B. Grouts and Epoxy shall conform to Section 806, NDDOT Specifications.

C. Reinforcing Steel shall conform to Section 612, NDDOT Specifications.

D. Expansion Joint shall be pre-formed, non-extruding type ½" in thickness, and shall conform to AASHTO M-33

E. Curing Compound shall be liquid membrane-forming type AASHTO M-148

F. Hot poured bituminous joint filler shall be used for sealing All Expansion Joints. The Hot bituminous sealer shall meet the requirements of Section 826.02 A.1 or 2, NDDOT Specifications.

3. CONSTRUCTION

A. Curb & Gutter and Valley Gutter shall be constructed in accordance with Section 748, NDDOT Specifications, except as otherwise specified herein. While performing the work necessary for the removal of the curb & gutter and valley gutter, the contractor shall be limited to 6± Inches of asphalt and/or 6± inches of boulevard dirt removal.

B. Sidewalks and Driveways shall be constructed in accordance with Section 750, NDDOT Specifications, except as otherwise specified herein.

C. Concrete Pavement shall be constructed in accordance with Section 550, NDDOT Specifications.

D. Contraction Joints and Alternate Contraction Joints shall be at a 10' spacing on Curb & Gutter, 5' spacing on Sidewalks.

E. Expansion Joints shall be at lot lines where possible (not more than 100' spacing) and at other locations as required, according to the NDDOT Specifications and determined in the field by the engineer.

F. All Valley Gutters shall not be less than 6 Inches thick, and have reinforcement steel Installed, which will be incidental to the Valley Gutter bid Item on the bid sheet.

G. Curing of Concrete shall be determined in the field by the engineer.

H. The Remove Curb & Gutter and Curb & Gutter items are intended to encompass Type "A", Type "B", & Type "C" curbing. Although, most of the existing curbing is Type "A", there may be areas, within the project, that have Type "B" or Type "C".

I. Replaced curb and gutter shall be backfilled with the top four (4) inches being topsoil. This shall be seeded with a Class I mix in compliance with Section 251 Seeding, of the NDDOT SPECIFICATIONS.
All costs shall be considered incidental to the price for the Curb and Gutter line items.

SECTION C-9
PRIME COAT, TACK COAT AND SAND SEAL

1. SCOPE

A. The work covered by this section shall consist of all necessary application of bitumen and aggregates for priming gravel, tack coating between layers of paving, and for sand seal on new pavements.

2. MATERIALS

A. Bitumen for Prime Coat shall be MC70 or MC250 and Tack Coat shall be SS1H, CSS1H or MS1 Emulsified Asphalt, unless otherwise ordered by the Engineer. Bitumen for Sand Seal shall be MC-3000, unless otherwise ordered by the Engineer.

B. Blotter Material for Prime Coat and Tack Coat shall meet Section 816, Class 44, of the NDDOT Specifications.

C. Sand Seal aggregates shall meet Section 816, Class 45, of the NDDOT Specifications.

3. CONSTRUCTION

A. Prime Coat, Tack Coat, or Sand Seal shall be applied to conform to Section 401, of the NDDOT Specifications, except as herein otherwise specified.

B. Bitumen quantities shall be between 0.25 and 0.35 gallons per SY. for Prime Coat, between 0.05 and 0.10 gallons per SY for Tack, and between 0.10 and 0.15 gallons per SY for Sand Seal, except as otherwise ordered by the Engineer. Bitumen ranges are for pure oil, not mixed.

C. Application rates of aggregates for Prime Coat and Sand Seal shall be 20 pounds per SY, unless otherwise ordered by the Engineer.

D. The contractor shall cover all manholes, gate valves, and concrete if applicable, with aggregate or paper before applying bituminous material and shall remove said aggregate or paper upon completion.

THIS PAGE INTENTIONALLY LEFT BLANK

SECTION C-10
HOT BITUMINOUS PAVEMENT

1. SCOPE

A. The work covered by this section shall consist of all necessary construction of Hot Bituminous Pavement and shall comply with the NDDOT Specifications.

2. MATERIALS

A. Hot Mix Asphalt shall conform to Section 430, of the NDDOT Specifications, except as herein otherwise specified.

B. Bitumen shall be Performance Graded Asphalt Binder (PG) 58S-28, unless otherwise indicated in the Specifications or directed by the Engineer. The Contractor shall provide to the Engineer the manufacturers recommendations for mix temperatures on all grades of Performance Graded Asphalt Binder specified.

C. Aggregates shall conform to FAA 42 as specified in Section 430, of the NDDOT Specifications, unless otherwise specified by the Engineer.

3. CONSTRUCTION

A. FAA 42 shall be produced, placed and accepted according to Section 430.03F of the NDDOT Specifications with the following revisions

1. This project will require a Contractor developed mix design. This may be a new mix design or a recent mix design preformed for a project with the same requirements. The cost for this mix design, if any, shall be included in the price for “Hot Bituminous Pavement FAA 42”.

2. The compaction requirements shall be as per Section 430.04 I.3 (Ordinary Compaction). The compaction equipment used shall include not less than two vibratory rollers. A pneumatic roller shall not be used to break down the top lift.

3. Section 430.04 E.5 will apply for graduation tolerances.

B. Construction Requirements shall conform to Section 430 of the NDDOT Specifications.

C. All new Pavements shall be Sand Sealed according to Section C-9, unless otherwise directed by the Engineer.

D. Daily Plant Cut-off Reports shall be provided to the engineer that indicates the amounts of materials used on site.

4. MISCELLANEOUS

A. Pothole Repair

a. The work area of Hot Bituminous Pavement, Pothole is described as any pavement area that is shown on the plans, where applicable.

b. This type of work shall be completed, in any work area, before any Hot Bituminous Pavement, Leveling, either hand or machine placed, and before any Rubberized Crack Seal, New & Reseal portions of the project are started.

c. Each and every location that is prepared for the placement of Hot Bituminous Pavement, Pothole material must be inspected by the engineer or his representative before any said material is placed by the contractor.

d. The specific work locations of this portion of the project will be defined by the engineer, before any work is started and shall include the following types of work.

1. Removal of asphalt
2. Excavation of unsatisfactory subgrade material, if required.
3. Work on subgrade preparation, if required.
4. Installation of Geotextile fabric or grid, if required.
5. Installation of gravel base course to provide an adequate subgrade, if required.
6. Application of tack coat oil along the edges of the remaining asphalt.
7. Placement of Hot Bituminous Pavement-Pothole material.

e. Work performed in alleys shall be done with small equipment, in order to minimize damage to asphalt section in repair areas.

f. Equipment used for cutting or sawing pavement shall not be operated on the boulevard. If placement is such that the equipment cannot cut out the patch without operation on the boulevard, a jackhammer or saw shall be used. Corner overcuts with a Colter Wheel will not be allowed.

g. Removal of existing pavement shall be done in such a manner which results in true full depth vertical face.

h. Pothole Repair shall be done according to either of the following methods:

    1. Method A shall be to place Hot Bituminous Pavement in two lifts where Rubberized Crack Seal work can be started after the first of the two lifts have been completed within any given block with the engineer's approval.

    2. Method B shall be to place Hot Bituminous Pavement in a single lift where Rubberized Crack Seal work cannot be started until the engineer has approved specific work areas. If the work performed that utilizes this Method B is not satisfactory, the engineer may require additional second lift work or grinding work before allowing any Rubberized Crack Seal work to start, at no additional cost to the owner.

i. Hot Bituminous Pavement, Pothole bid item, shall be hand placed leveling.

B. <u>Leveling</u>

a. Where Hot Bituminous Pavement,-Leveling is to be done, in any phase, the area to be leveled shall be cleaned and tacked according to Section C-9

b. No Hot Bituminous Pavement,-Leveling, either hand or machine placed, shall be started until Rubberized Crack Seal, new & reseal, and the Hot Bituminous Pavement, Pothole portions of the project are both completed.

c. It is the intent of the engineer to require the contractor to clean, tack, and level depressions within the pavement area to improve drainage and ride ability.

d. The specific work locations for Hot Bituminous Pavement,-Leveling for the project will be determined by the engineer before work is started.

e. Aggregate for the Hot Mix Bituminous Pavement, Leveling shall conform to Section C-10, Hot Bituminous Pavement

f. Wherever an overlay is planned, the Contractor shall not deposit or lay any Hot Bituminous Pavement material within the limit of the Curb and Gutter section and shall utilize an appropriately sized sluff attachment when depositing or laying Hot Bituminous Pavement material along the gutter. Which size shall be determined by joint agreement between the contractor and the engineer on a location by location basis. In addition, the contractor shall utilize a hand rake to minimize the effects of the overlay on driveways and alley aprons, where applicable.

C. Paving Fabric

a. The Paving Fabric shall be petroleum based and the engineer will determine the width of application for each location of work. The Paving Fabric bid item shall include the cost of Paving Fabric, placement of the Fabric, and Asphaltic Cement used for tack, as per the manufacturer's recommendations, which shall be submitted to the engineer for review and /or approval before any work can be started.

b. The Paving Fabric shall be specifically produced for Overlay applications and shall comply with the following specifications, and shall be approved prior to installation by the engineer. Certifications shall be supplied.

1. Tensile Strength, ASTM Method D-4632-86, 90 psi Minimum

2. Elongation at break, 50% Minimum

SECTION C-11
BITUMINOUS SEAL COAT

1. SCOPE

A. The work covered by this section shall consist of all necessary application of a Seal Coat on paved or unpaved streets or alleys.

2. MATERIALS

A. Bituminous Seal Coat shall conform to Section 420, of the NDDOT Specifications, except otherwise specified by the Engineer.

B. Bitumen shall be CRS-2P, unless otherwise specified by the Engineer.

C. Cover Coat Material shall conform to Class 41 as specified in Section 816 of the NDDOT Specifications, and shall pass standard stripping tests.

D. Blotter Material for maintenance shall conform to Class 44 as specified in Section 816 of the NDDOT Specifications.

3. CONSTRUCTION

A. Construction Procedures and Limitations shall conform to Section 420, of the NDDOT Specifications, except as otherwise specified.

B. Quantities for single seal shall be 25 to 30 pounds of aggregate and 0.35 to 0.45 gallons of bituminous material per SY. Quantity for second layer of double seal shall be 15 pounds of aggregate and 0.2 gallons of bituminous material per SY. The Engineer may adjust the rates of application within or outside of these limits if local conditions require such action to provide a satisfactory end product.

C. Maintenance Period for seal coat projects shall be five (5) days after completion of the entire project.

D. At the completion of the maintenance period, two separate complete street sweeping with pick up brooms shall be completed. The second brooming shall not commence until a minimum of two weeks after the first brooming.

E. The contractor shall cover all manholes, gate valves, and concrete if applicable, with aggregate or paper before applying bituminous material and shall remove said aggregate or paper upon completion

F. No Seal Coat work shall be started, in any phase, until all other work has been completed.

G. Cover coat material will be measured and paid for by the ton of aggregate accepted in place.

SECTION C-12

GROUTED ROCK RIP-RAP

1. **SCOPE**
   A. The work covered by this section shall consist of all the construction that is required and necessary to place Grouted Rock Rip-Rap.
2. **MATERIALS**
   A. **GROUTED ROCK RIP-RAP** shall conform to **SECTION 256,** of the **NDDOT SPECIFICATIONS,** except as herein otherwise specified.
   B. **RIP-RAP STONE** shall be gradation of 16”
3. **CONSTRUCTION**
   A. **CONSTRUCTION PROCEDURES AND LIMITATIONS** shall conform to **SECTION 256,** of the **NDDOT SPECIFICATIONS.**

THIS PAGE INTENTIONALLY LEFT BLANK

SECTION C-13
SPECIAL PROVISIONS

1. GENERAL

A. Traffic control is required and shall conform to **49. TRAFFIC SIGNING REQUIREMENTS**, page **GC (15)** of the current edition of the **CITY OF JAMESTOWN STANDARD SPECIFICATIONS**, and will be considered as incidental to the contract.

B. The contractor shall provide the engineer with daily reports that include the following information:
   a. Description and location of work completed each day.
   b. Quantity of all bid items placed each day.
   c. Average pavement section, existing in place, per block, if pothole repairs are required.
   d. The quantities of all bid items placed each day, for each UNIT or AREA within a phase, shall be submitted separately.
   e. Pavement estimated will not be processed for any work performed under the contract unless the requirements of this section D. have been met by the contractor and the contractor has submitted the information to the engineer on or before the 25th of the month.

2. MISCELLANEOUS

A. Weed Spraying and Removal
   a. The contractor shall spray two weeks prior to removing the weeds in the work area. The work is to include the area between the gutter and pavement section, in preparation for Rubberized Crack Seal and /or Seal Coat
   b. The weed control work mentioned in a. above shall be performed at least 1 week prior to any application of Rubberized Crack Seal and /or Seal Coat
   c. The spraying shall be performed by the use of a contact herbicide such as Roundup, or approved equal. The contractor shall perform the spraying under low wind conditions, in order to minimize the effect on property vegetation. The method of work shall be approved by the engineer before any work is performed.
   d. All weeds shall be visibly dead prior to any work being completed. If weeds are actively growing, the contractor shall be required to go back and respray as per this section. Any cost associated to respraying shall be the responsibility of the contractor.

THIS PAGE INTENTIONALLY LEFT BLANK

SECTION C-14
ASPHALT MILLING

1. GENERAL

A. Asphalt Milling, Type I, consists of the milling of the existing asphalt section joints to a width of 12 inches and a depth of 3 inches in the phases where the work is required and at the location specified by the engineer. The milled asphalt section shall be replaced according to Pothole Repair.

B. Asphalt Milling, Type II, consists of the milling of the existing asphalt section along the gutter to a width of 14’ with depths of 1.5 inch below the gutter line and day lighted at the at the 14’ line from the gutter line, in the phases where the work is required and at the location specified by the engineer. Portions of the milled asphalt section shall be replaced according to Pothole Repair, if directed by the engineer and Edge Mill Paving.

C. Asphalt Milling, Type IIA, consists of the milling of the existing asphalt section along the gutter to a width of 12’ with depths to match the gutter line grade and day lighted at the 12’ line from the gutter line, in the phases where the work is required and at the location specified by the engineer. No additional Asphalt Replacement will be required with these items.

D. Asphalt Milling, Type III, consists of the milling of the entire existing asphalt section from gutter line to gutter line to a depth specified in the Plans & Specifications in the phases where the work is required and at the location specified by the engineer.

THIS PAGE INTENTIONALLY LEFT BLANK

SECTION C-15
RUBBERIZED CRACK SEAL

1. GENERAL

A. Rubberized Crack Seal shall be Elastoflex Sealants, Elastoflex 62, as manufactured by Maxwell Products, Inc., and shall conform to ASTM 3405, or approved equal.

B. All new cracks, greater than 1/8 inch in width, in the pavement area, shall be routed to a width of ¾ inch and a depth of ¾ inch, minimum.

C. All new cracks that are routed shall be sealed and squeegeed to within 1/8 inch of the pavement surface.

D. Alligator cracks are not to be routed or sealed, as these areas will be repaired by removal and replacement of the asphalt section, under C-3 Pavement Preparation.

E. Previously sealed cracks in the pavement area that show sign of deterioration shall be resealed and squeegeed to within 1/8 inch of the pavement surface.

F. A sign of deterioration of previously sealed cracks includes, but is not limited to, the following.

   a. Separation of existing Rubberized Crack Seal material and pavement.

   b. Cracking of the existing Rubberized Crack Seal material

   c. Cracking of the existing Seal Coat that was previously applied over the existing Rubberized Crack Seal material.

G. All new cracks and previously sealed cracks shall be blown clean by air pressure, and shall be free of all dirt, moisture, etc., before any Rubberized Crack Seal material is placed.

THIS PAGE INTENTIONALLY LEFT BLANK

SECTION C-16
MEASUREMENTS AND PAYMENTS

1. GENERAL

A. Method of measurement, basis of payment and limitations of incidental work shall be as follows:

1. Cleanup of work sites to presentable condition is considered as incidental to all work items, and no payment for such cleanup will be made.

2. Each item is understood to include furnishing of all labor, equipment, materials, asphalt/concrete plant costs, tools and other items normally incidental to and required for a complete installation or construction of the particular item complete in place and ready for use.

3. Unless a bid item is listed in the proposal, no payment for site preparation shall be made for site preparation items. When a bid item exists, measurements, and payments will be as indicated by the proposal.

4. Utility excavation and backfill are considered as incidental to the utility installation involved, and no payment for such earthwork will be made.

5. Excavation will be measured and paid for by the cubic yard in original location determined by the engineer.

6. Embankment will be measured and paid for by the square yard in final location determined by the engineer.

7. Subgrade Preparation will be measured and paid for by the square yard determined by the engineer.

8. Geotextile Fabric – Type I shall be measured and paid for by the square yard. Overlaps are not paid for.

9. Sidewalk and Driveway excavation and embankment are considered as incidental to the work unless grade adjustments of over 6 inches are involved.

10. Storm or Sanitary sewer pipe will be measured and paid for by the linear foot measured from center to center of manholes and catch basins.

11. Manholes, Catch Basins, and Inlets will be measured by the actual number installed complete with bases, castings and fillets.

12. Water main will be measured and paid for by the linear foot of pipe installed and measured through fittings.

13. Water and Sewer services will be measured and paid for by the linear foot of pipe installed measured from the center line of the main, without extra compensation for plugs and caps

14. Water and Sewer fittings will be measured and paid for by the actual number of each type of fitting installed, without extra compensation for plugs and caps.

15. Sewer Risers will be measured and paid for as service line.

16. Concrete for thrust blocks on water mains and casing for sewer riser wyes will be considered as incidental to installation of the utility and no payment for such concrete will be made.

17. Testing and Sterilization of water mains and sewers is considered as incidental to installation of the utility, and no payment for such work will be made.

18. Gravel Base Course will be measured and paid for by the cubic yard compacted in place unless noted otherwise in the bid documents.

19. Concrete Curb and Gutter will be measured and paid for by the linear foot measured at the face of the curb and measured through driveways.

20. Sidewalks will be measured and paid for by the square foot for size and by the inch for thickness.

21. Concrete Structures will be measured and paid for by the units established in the bid proposal.

22. Reinforcing Steel, Expansion Joint Material, and Curing Compounds for concrete are considered as incidental to concrete construction and no payment for these items will be made, unless otherwise provided for in the bid documents, as a pay item.

23. Rip rap will be measured and paid for by the square yard, in place.

24. Bitumen for Prime Coat, Tack Coat, and Sand Seal will be measured and paid for by the gallon adjusted to 60 degrees F., unless otherwise indicated in the bid documents.

25. Hot Bituminous Pavement of all types will be measured and paid for by the wet ton of material accepted in place and in conformance with Section 430.04, Construction Requirements and Section 430.04 M Acceptance, NDDOT Specifications. Payment will not be made for quantities over 10% higher than specified quantity based on actual square footage except by written order of the engineer. Payment will not be made for the above materials unless the daily cut-off reports, as required by Section C-10, Hot Bituminous Pavement have been submitted to the engineer before the 25th of the month.

26. Bitumen for Bituminous Seal Coat will be measured and paid for by the gallon adjusted to 60 degrees F., unless otherwise indicated in the bid documents.

27. Cover Coat Material for Bituminous Seal Coat will be measured and paid for by the ton of aggregate accepted in place.

28. Blotter Material and Coating Aid for Bituminous Seal Coat is considered as incidental to seal coat work, and no payment for such items will be made.

29. Back sloping will be measured by the engineer and will be paid for by the unit price of excavation and embankment.

30. Bitumen, PG 58-28 will be measured and paid for by the ton of bituminous material actually used to obtain a mix satisfactory to the engineer. Payment will not be made for the above materials unless the daily cut-off reports, as required by Section C-10, Hot Bituminous Pavement have been submitted to the engineer before the 25th of the month.

31. Rubberized Crack Seal, New shall be measured and paid for by the pounds used.

32. Rubberized Crack Seal, Reseal shall be measured and paid for by the pounds used.

33. Remove Asphalt shall be measured and paid for by the square yard, as approved by the engineer.

34. Adjust Manhole shall be measured and paid for by the unit. Adjusting Rings shall be 1½" clear span manhole adjusting ring, as manufactured by Cretex, or approved equal.

35. Adjust Gate Valve shall be measured and paid for by the unit. 1” Valve Box Adapter, H-10376, with Special Lid, H-10361, as manufactured by Mueller Co., or approved equal.

36. Adjust Manhole, and Adjust Gate Valve, in all phases, shall be installed so that they are ½” below finished asphalt grade, if applicable.

37. Adjust Catch Basin shall be measured and paid for by the unit, unless otherwise specified by the engineer.

38. Remove Curb & Gutter shall be measured and paid for by the linear foot. This item will pay for gutter lines to 24” inch width. Any gutter lines in excess of 24” will be negotiated as extra work items for remove 6” Slab and 6” Driveway.

39. Remove 6” Slab shall be measured and paid for by the square foot. This item will include Valley Gutters, Driveways and Concrete Pavement.

40. 6” Driveway shall be measured and paid for by the square foot.

41. Valley Gutters shall be measured and paid for by the square foot.

42. Remove 4” Sidewalk shall be measured and paid for by the square foot.

43. Saw Concrete shall be measured and paid for by the linear foot.

44. Weed Spraying shall be measured and paid for by the lump sum basis.

45. Paving Fabric shall be measured and paid for by the square yard.

46. Pit Run Gravel shall be measured and paid for by the ton.

47. Tree Removal shall be measured and paid for on a lump sum basis.

48. Asphalt Milling, Type I shall be measured and paid for by the linear foot.

49. Asphalt Milling, Types II, IIA & III, shall be measured and paid for by the square yard.

Section 5: SPECIFICATION DETAILS

INDEX

1. BARRICADE	C-3-A
2. TYPE I, CATCH BASIN	C-4-A
3. TYPE II, CATCH BASIN	C-4-B
4. TYPICAL SEWER PIPE BEDDING	C-5-A
5. TYPICAL WYES & RISERS DETAIL FOR SEWER SERVICES	C-5-B
6. TYPICAL LATERAL CONNECTIONS	C-5-C
7. TYPICAL PRECASE OR BRICK CONCENTRIC MANHOLE DETAILS	C-5-D
8. TYPICAL DROP MANHOLE	C-5-E
9. TYPICAL WATER PIPE BEDDING	C-6-A
10. TYPICAL THRUST BLOCK DETAILS	C-6-B
11. TYPICAL CORPORATION STOP AND CURB STOP	C-6-C
12. TYPICAL GATE VALVE SETTINGS	C-6-D
13. TYPICAL FIRE HYDRANT SETTING	C-6-E
14. TYPICAL CURB DETAILS	C-8-A
15. CONCRETE CURB JOINTS	C-8-B
16. TYPICAL SIDEWALK	C-8-C
17. TYPICAL DRIVEWAY, (BOULEVARD> 4')	C-8-D
18. TYPICAL DRIVEWAY, (1 ½' TO 4' BOULEVARD)	C-8-E
19. TYPICAL DRIVEWAY, (0 TO 1 ½' BOULEVARD)	C-8-F
20. DRIVEWAY PLACEMENT	C-8-G
21. SIDEWALK RAMP	C-8-H
22. 72 INCH CONCRETE VALLEY GUTTER	C-8-I

23. DRAINAGE CHANNEL **C-8-J**

24. TYPICAL HOT BITUMINOUS PAVEMENT PATCH DETAIL **C-10-A**

25. TYPICAL SECTION, NEW RESIDENTIAL ROADWAY **C-10-B**

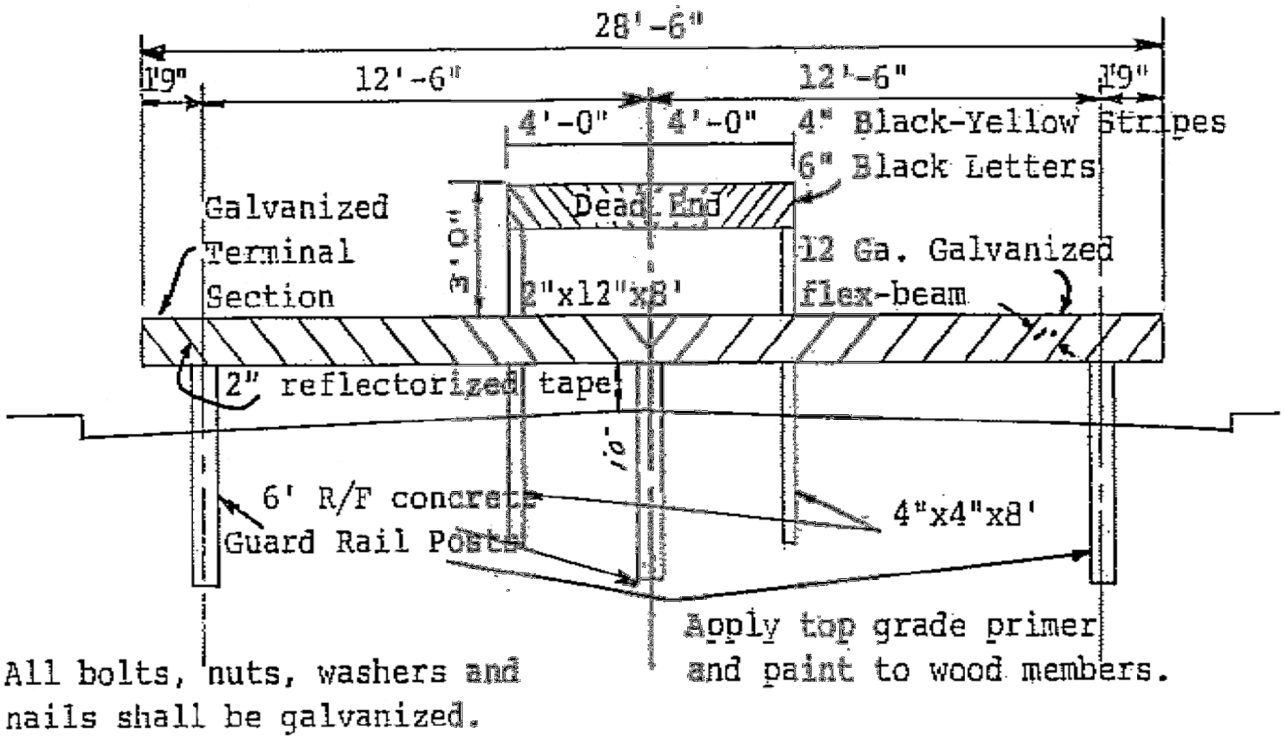
28'-6"
1'9"
12'-6"
12'-6"
1'9"
4'-0"
4'-0"
4" Black-Yellow Stripes
6" Black Letters
Dead End
3'-0"
Galvanized
Terminal
Section
2"x12"x8'
12 Ga. Galvanized
flex-beam
2" reflectorized tape
10'
6' R/F concrete
Guard Rail Posts
4"x4"x8'
Apply top grade primer
and paint to wood members.
All bolts, nuts, washers and
nails shall be galvanized.

B A R R I C A D E

INLET - TYPE 1

D-722-1

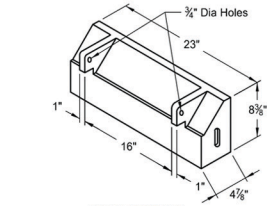

ISOMETRIC
(Grate Style "D" & "L")

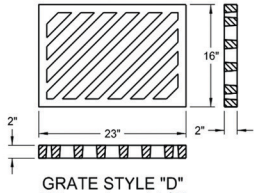

GRATE STYLE "D"
(Waterway Area = 1.1 SF)

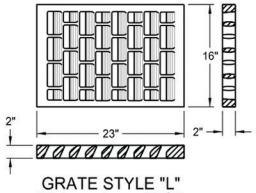

GRATE STYLE "L"
(Waterway Area = 0.9 SF)

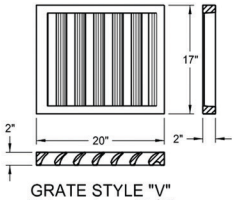

GRATE STYLE "V"
(Waterway Area = 1.3 SF)

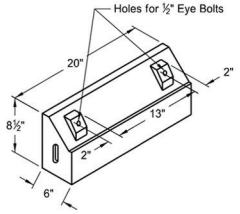

ISOMETRIC
(Grate Style "V")

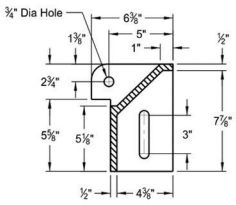

CURB BOX
(Grate Style "D" & "L")

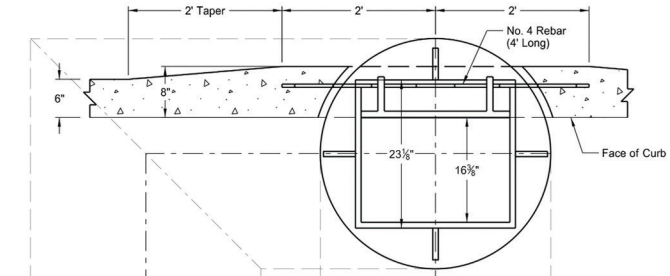

TOP
(Grate Style "D" & "L")

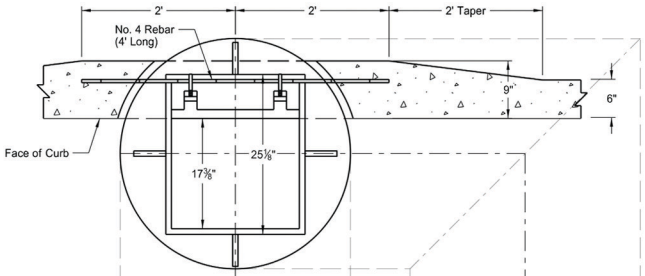

TOP
(Grate Style "V")

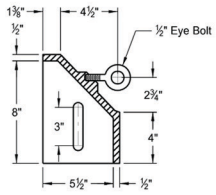

CURB BOX
(Grate Style "V")

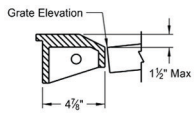

CURB PLATE
(Grate Style "D" & "L")

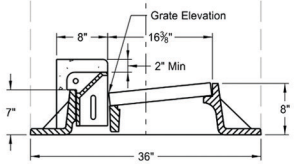

SIDE
(Grate Style "D" & "L")

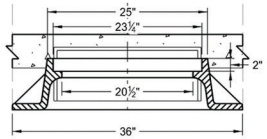

FRONT
(Grate Style "D" & "L")

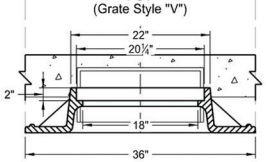

FRONT
(Grate Style "V")

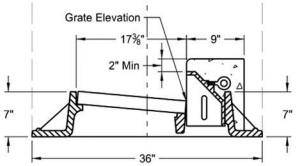

SIDE
(Grate Style "V")

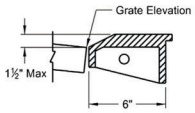

CURB PLATE
(Grate Style "V")

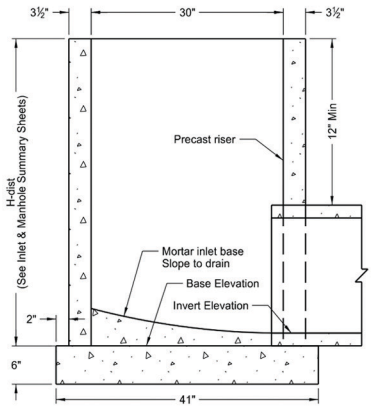

ELEVATION

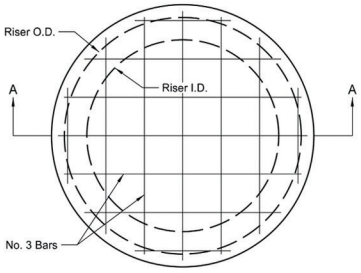

PLAN

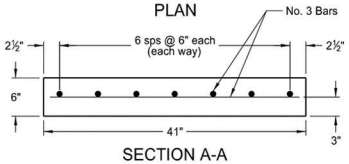

SECTION A-A

NOTES:

1. Use of other castings, similar in dimension, is allowed if the casting conforms to the riser section and has a grate style specified in the plans, meeting or exceeding the waterway area listed. Modifications to the inlet to facilitate similar castings are only allowed with written approval from the Engineer.
2. Use castings manufactured in accordance with AASHTO M306-09. Use metal conforming to AASHTO M105 Class 35 B in the manufacture of castings.
3. Use class AE-3 concrete precast or cast-in-place bases constructed in accordance with NDDOT Standard Specifications.
4. Construct precast concrete risers in accordance with AASHTO M199.
5. On projects with PCC pavement, construct inlet risers 4 to 5 inches below final elevation and adjust to final grade with adjusting rings or cast-in-place concrete after paving. Include all costs for this adjustment in the price bid for the inlet.
6. Use Grade 60 reinforcing steel.
7. Use curb plates in lieu of curb boxes when curb height at inlet is 4" or less.

NORTH DAKOTA
DEPARTMENT OF TRANSPORTATION

05-14-13

REVISIONS

DATE	CHANGE
11-27-13	Revised drawing title, notes & curb plate subtitle.
6-24-14	Revised Note 3.
10-17-17	Updated to active voice.

This document was originally issued and sealed by Roger Weigel, Registration Number PE- 2930, on 10-17-2017 and the original document is stored at the North Dakota Department of Transportation

C-4-A

INLET - TYPE 2

D-722-2

Pay Items
Inlet - Type 2 .....Ea.
Inlet - Type 2, Double.....Ea.

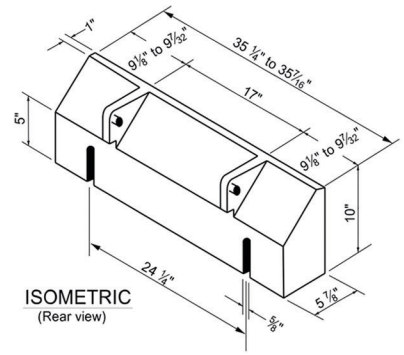

ISOMETRIC
(Rear view)

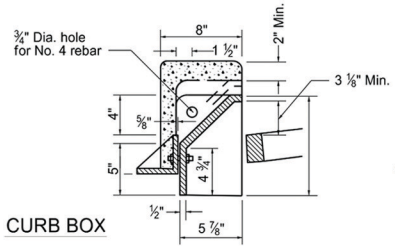

CURB BOX

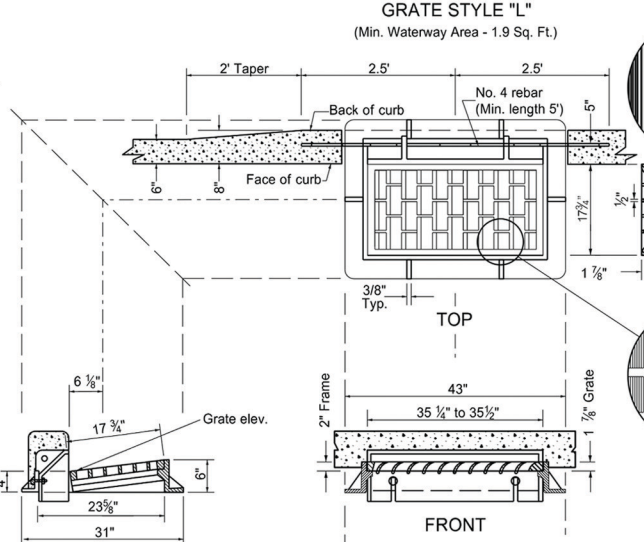

CASTING DETAILS

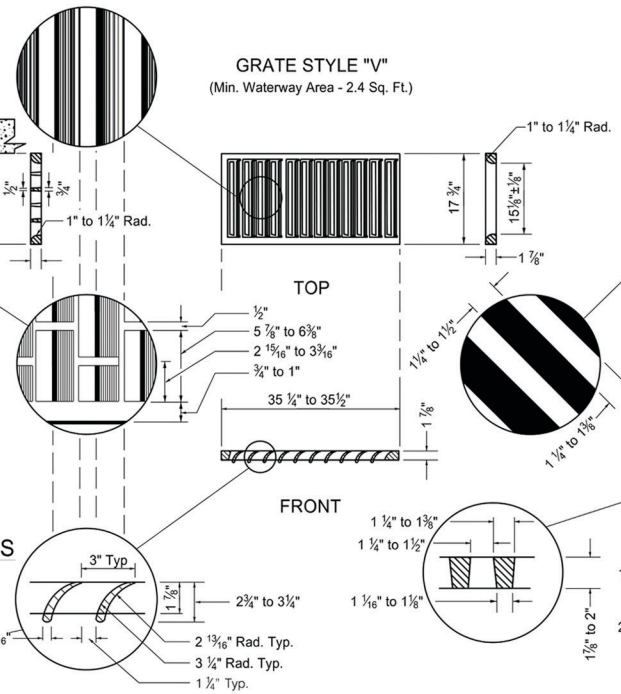

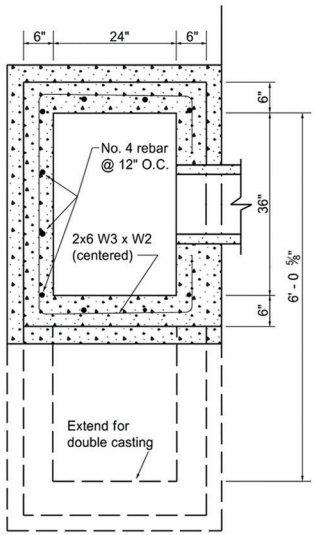

TOP

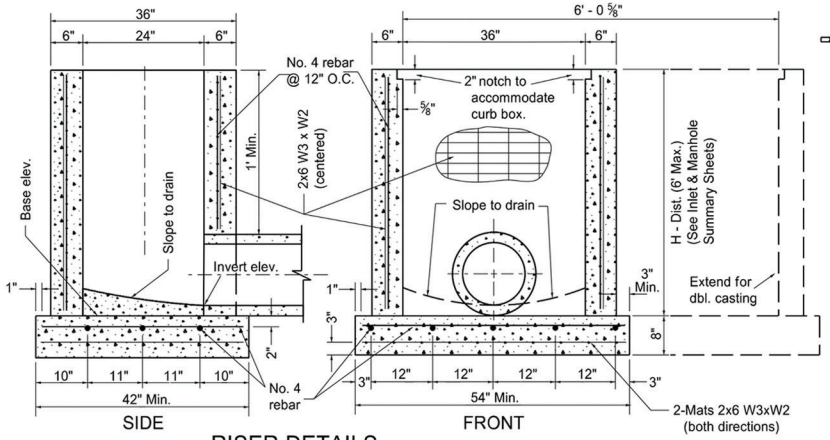

RISER DETAILS

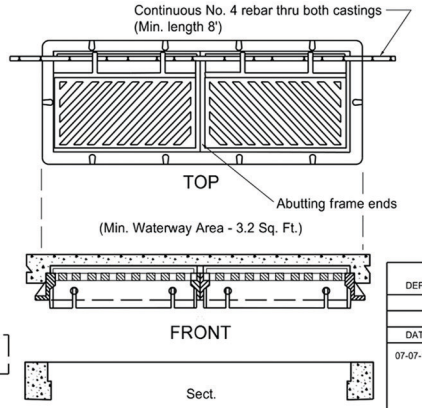

INLET - TYPE 2 - DOUBLE

Notes:

1. Drainage structure castings shall be manufactured in accordance with AASHTO M306. Metal used in the manufacture of castings shall conform to AASHTO M105 Class 35B.
2. Other castings, similar in dimension, may be used if the casting conforms to the riser section and has the grate style as specified in the plans. If modifications to the inlet riser are required to accomodate similar castings, the contractor must receive written approval from the engineer.
3. Precast risers shall be constructed in accordance with ASTM C858.
4. The contractor shall have the option of using precast or poured in place bases. Cast in place concrete shall be Class AE-3. Construction shall be in accordance with section 722 of the Standard Specifications.
5. On projects with P.C.C. pavement, all inlet risers or barrels shall be constructed 4 to 5 inches below final elevation and adjusted to final grade after paving. Adjustment may be done with adjusting rings or cast-in-place concrete. All costs for this adjustment shall be included in the price bid for the inlet.
6. Welded wire reinforcing fabric shall conform to AASHTO M55 Grade 65.
7. The deformed reinforcing steel shall conform to AASHTO M31.

NORTH DAKOTA
DEPARTMENT OF TRANSPORTATION
05-12-14

REVISIONS

DATE	CHANGE
07-07-14	Revised Note 4

This document was originally issued and sealed by TERRENCE R. UDLAND Registration Number PE- 2674, on 07/07/14 and the original document is stored at the North Dakota Department of Transportation

C-4-B

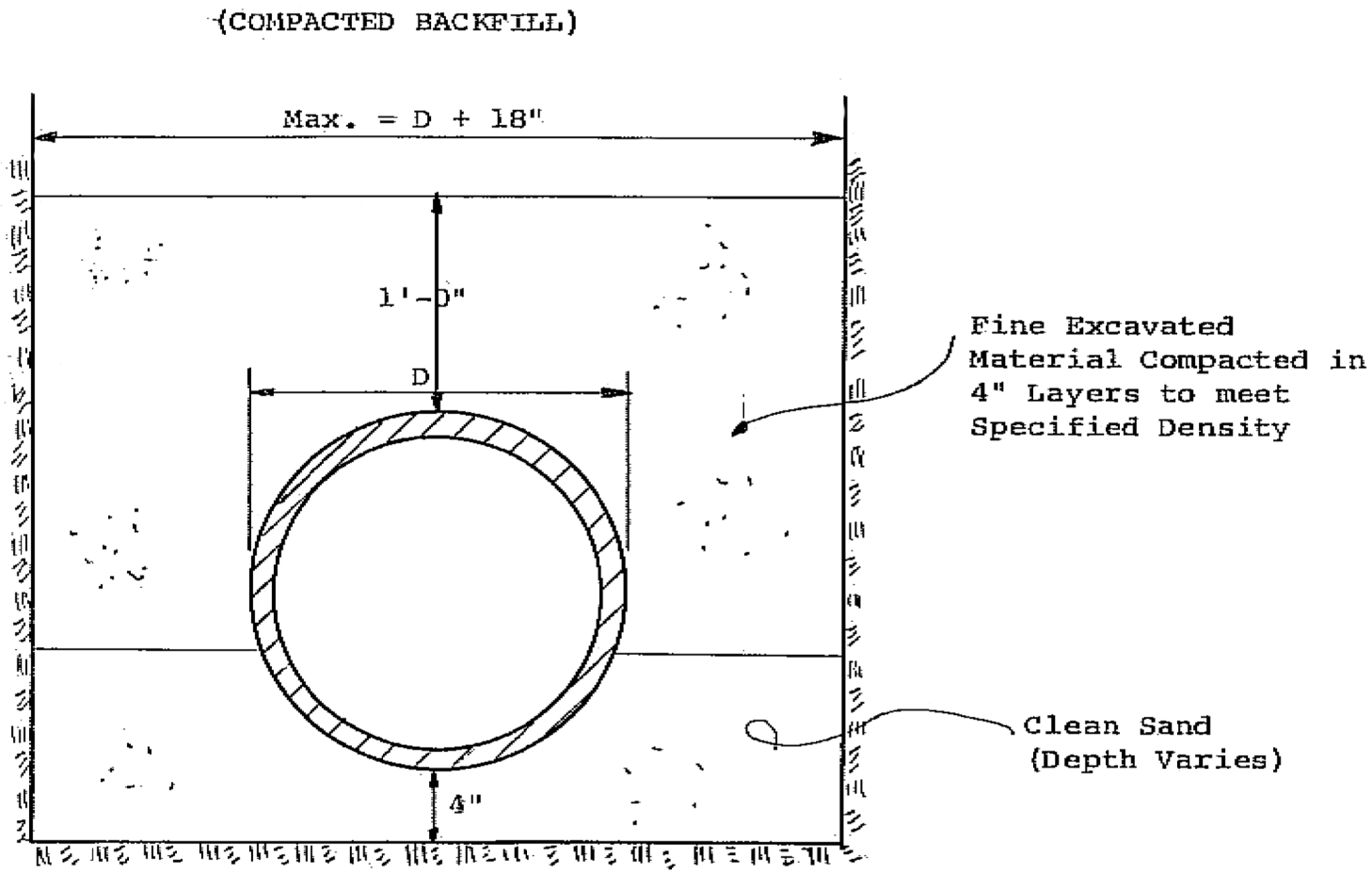

TYPICAL SEWER PIPE BEDDING
No Scale

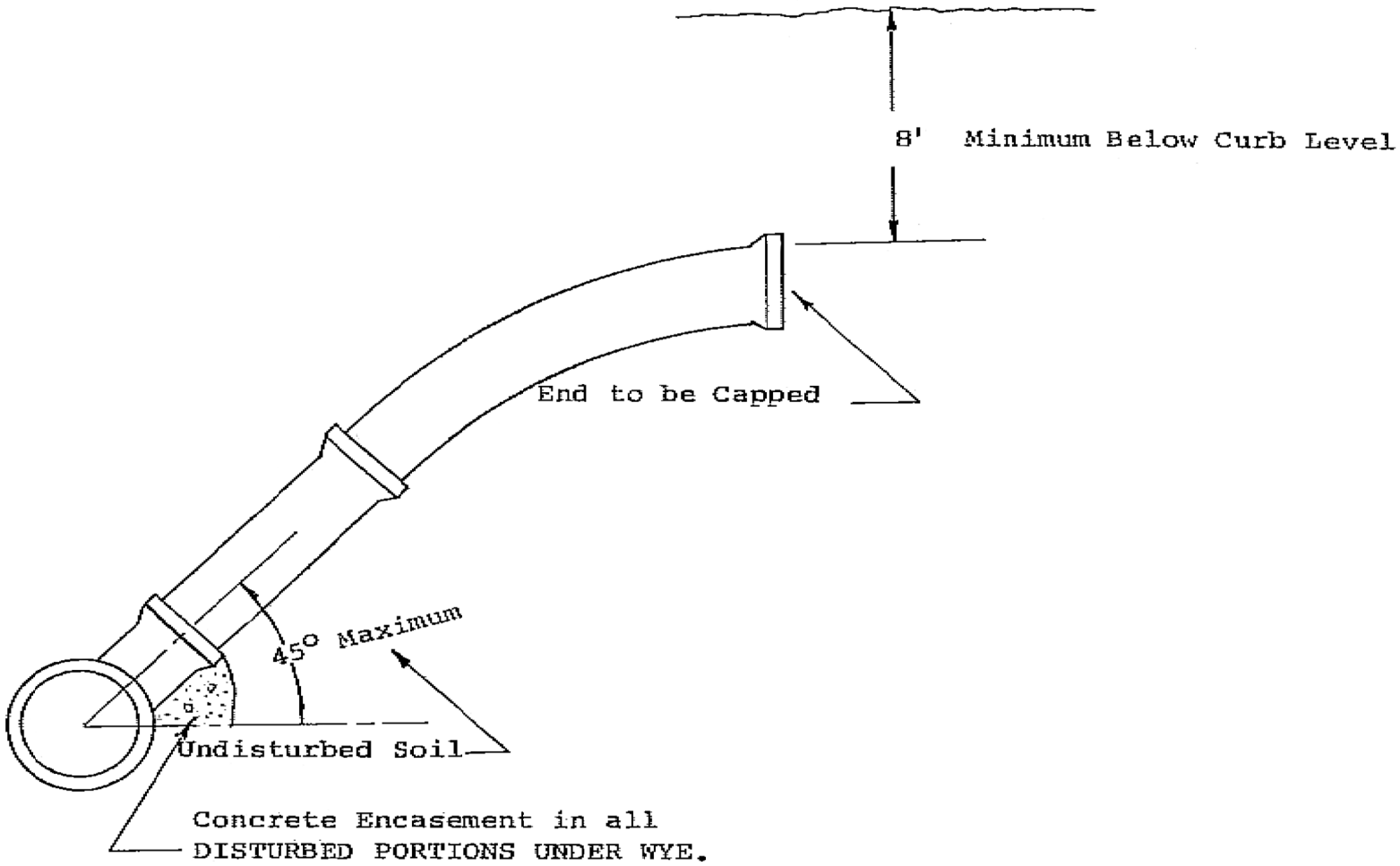

T Y P I C A L W Y E S & R I S E R S D E T A I L
F O R S E W E R S E R V I C E S

(No Scale)

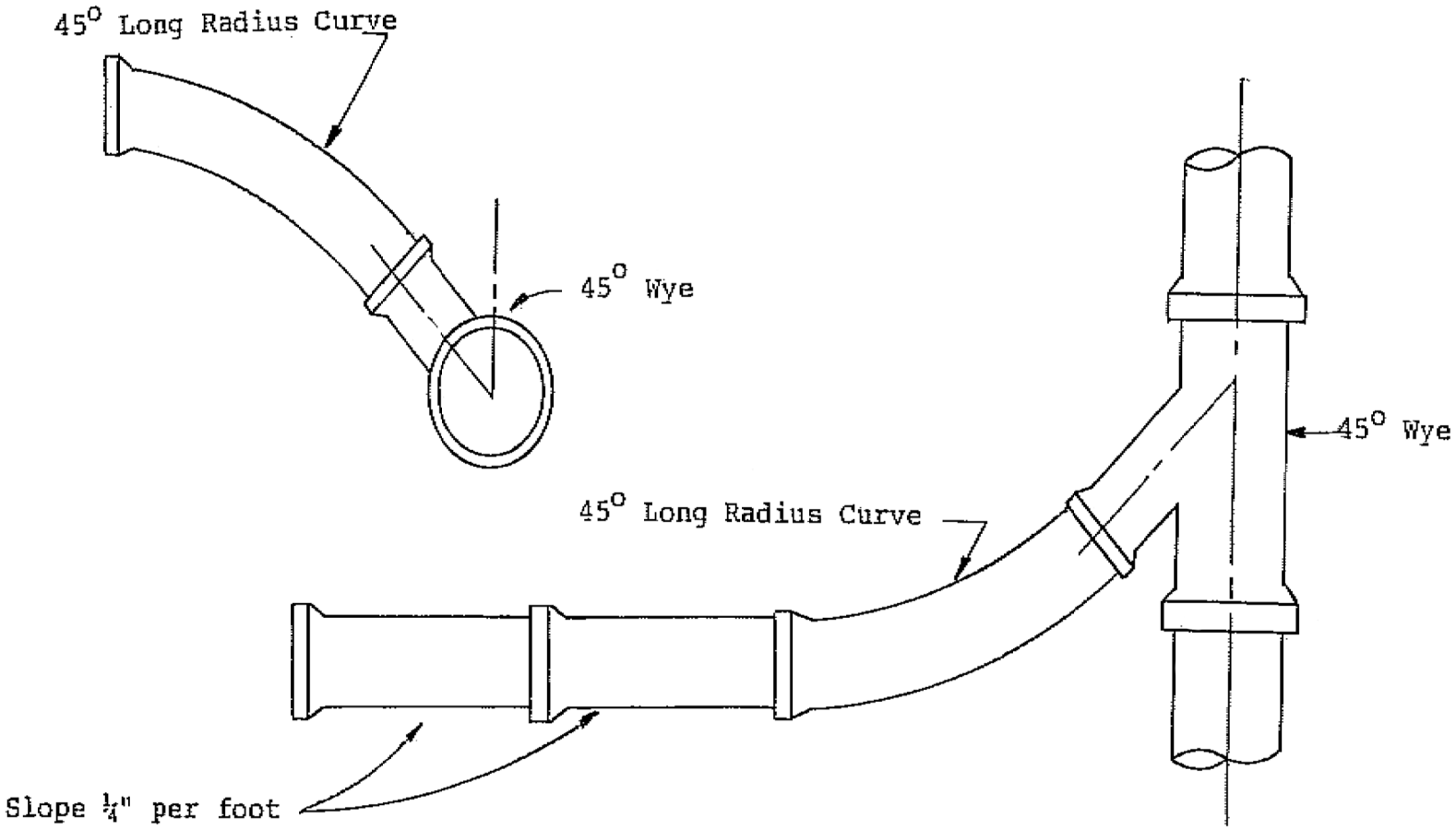

T Y P I C A L L A T E R A L C O N N E C T I O N S

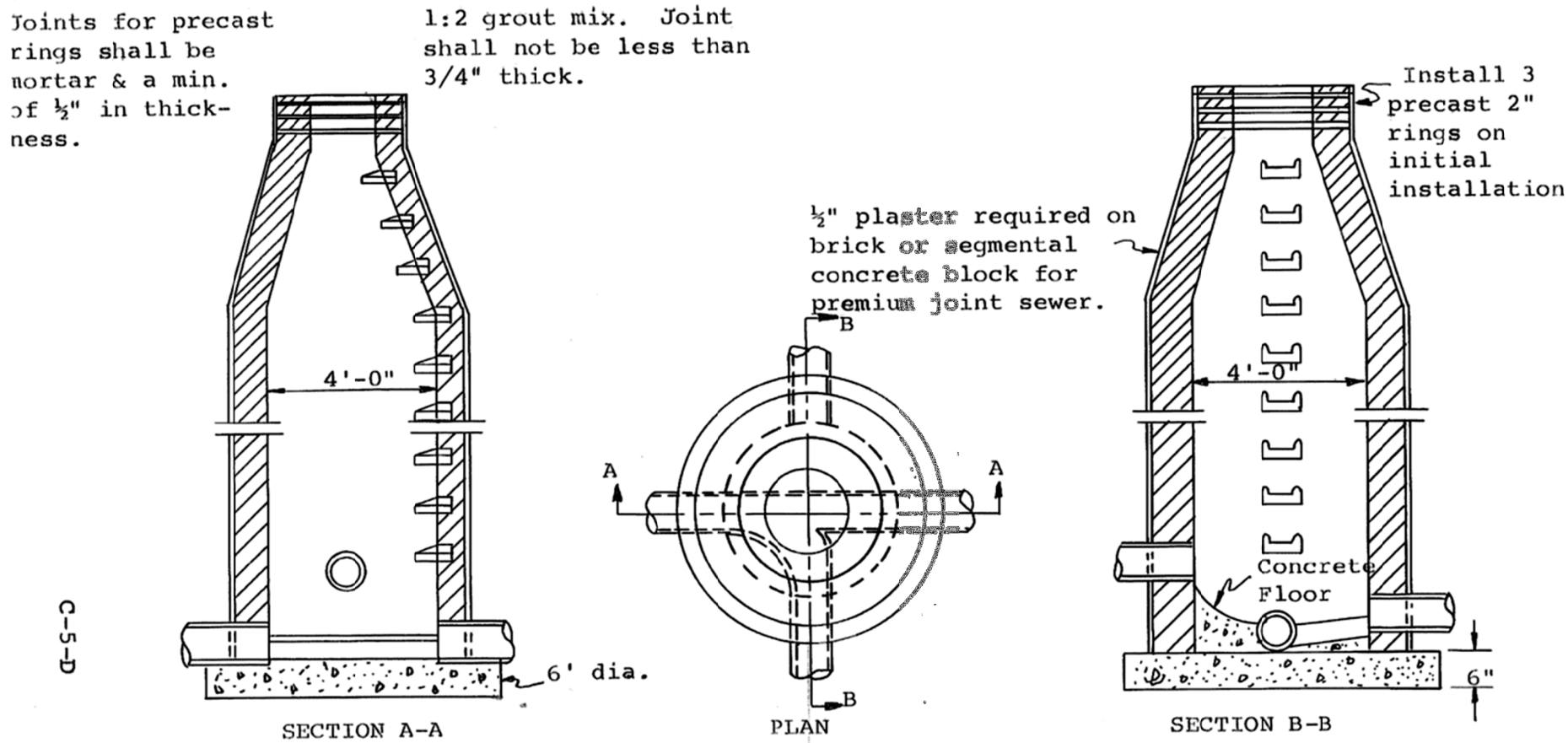

NOTES: 1. Brick or concrete segmental block shall have a wall thickness of 8"

2. Precast rings shall have a wall thickness of 5" min. & shall be reinforced in accordance with A.S.T.M. specs. C-76 for 48" dia. R.C.P. Class II.

T Y P I C A L P R E C A S T O R B R I C K C O N C E N T R I C

M A N H O L E D E T A I L S

T Y P I C A L D R O P M A N H O L E

NOTE: Cover frame installed by securely seating in a 1:2 grout mixture. Joint shall not be less than 3/4" in thickness.

NOTE: 1. Brick or segmental concrete block M.H. shall have a wall thickness of 8"

2. Precast rings shall have a wall thickness of 5" minimum.

3. Joints for precast rings shall be mortar & a minimum of ½" in thickness.

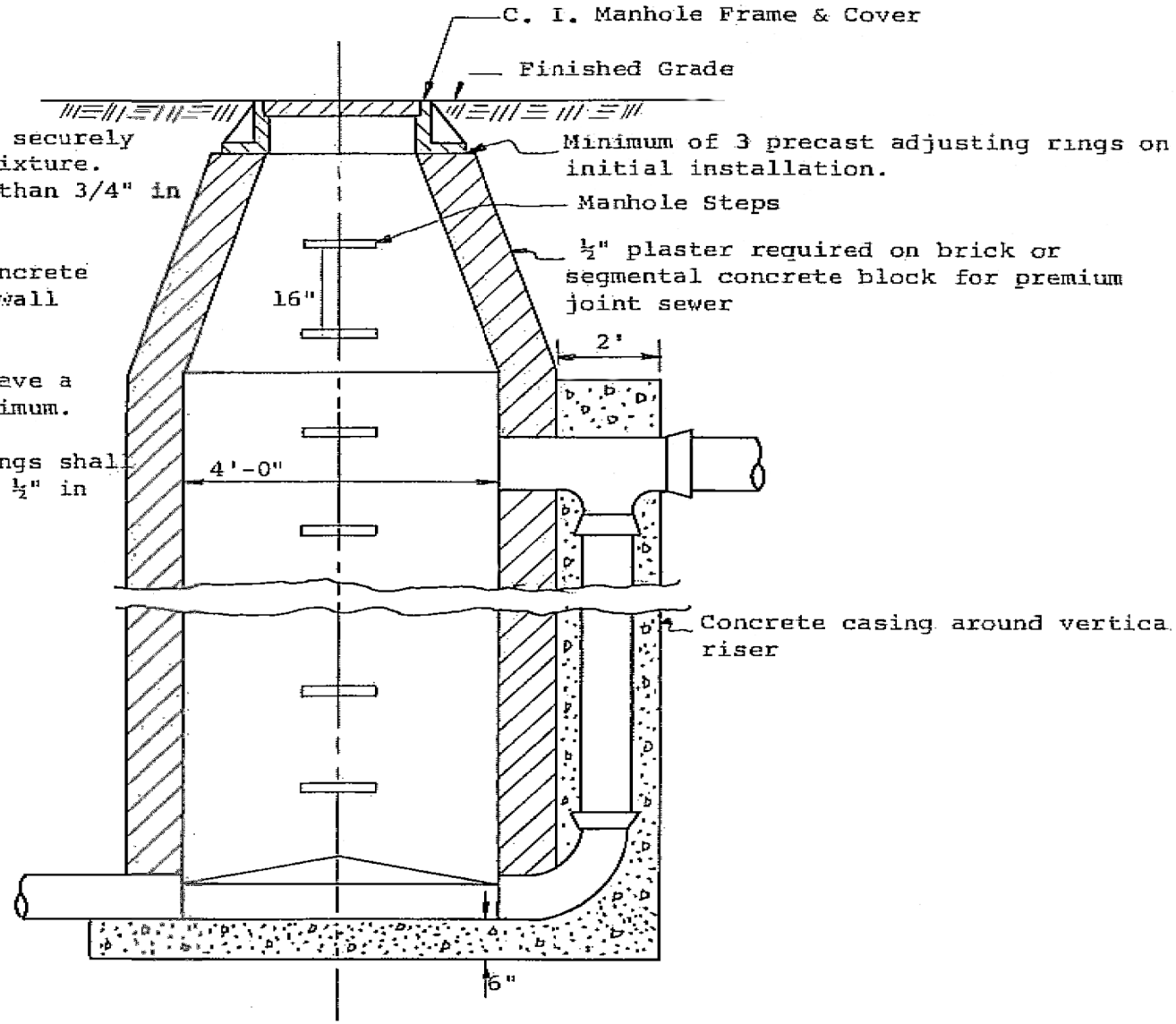

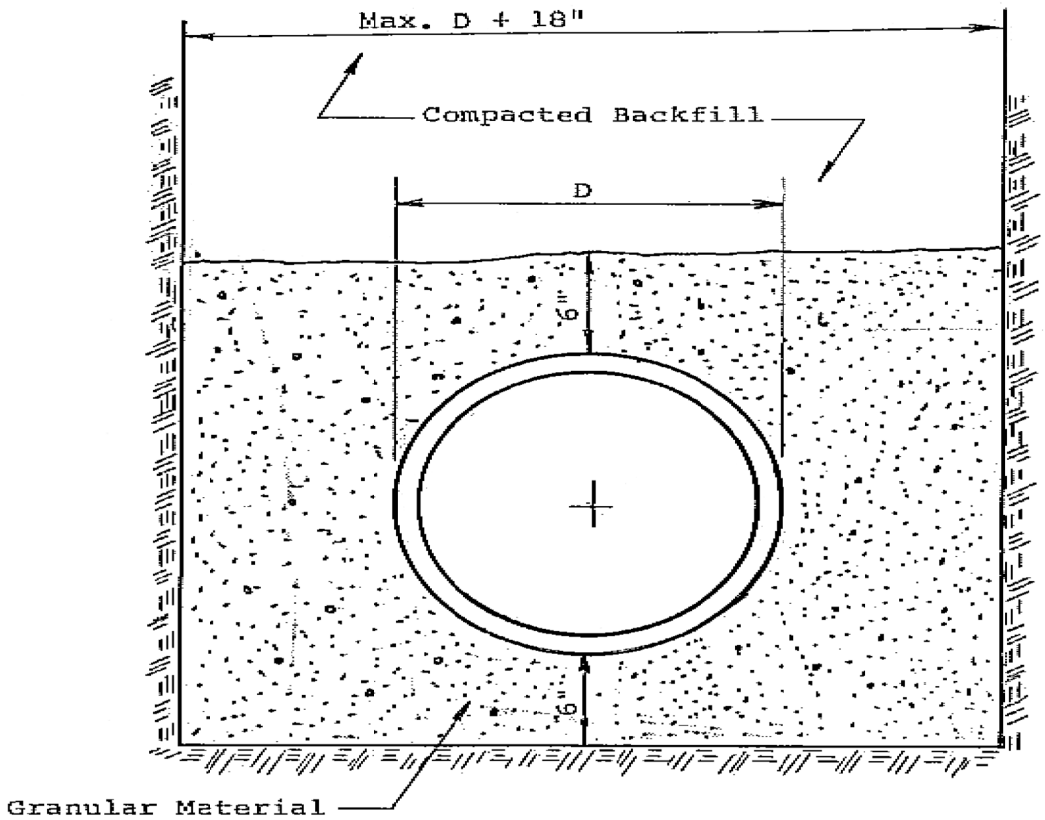

TYPICAL WATER PIPE BEDDING

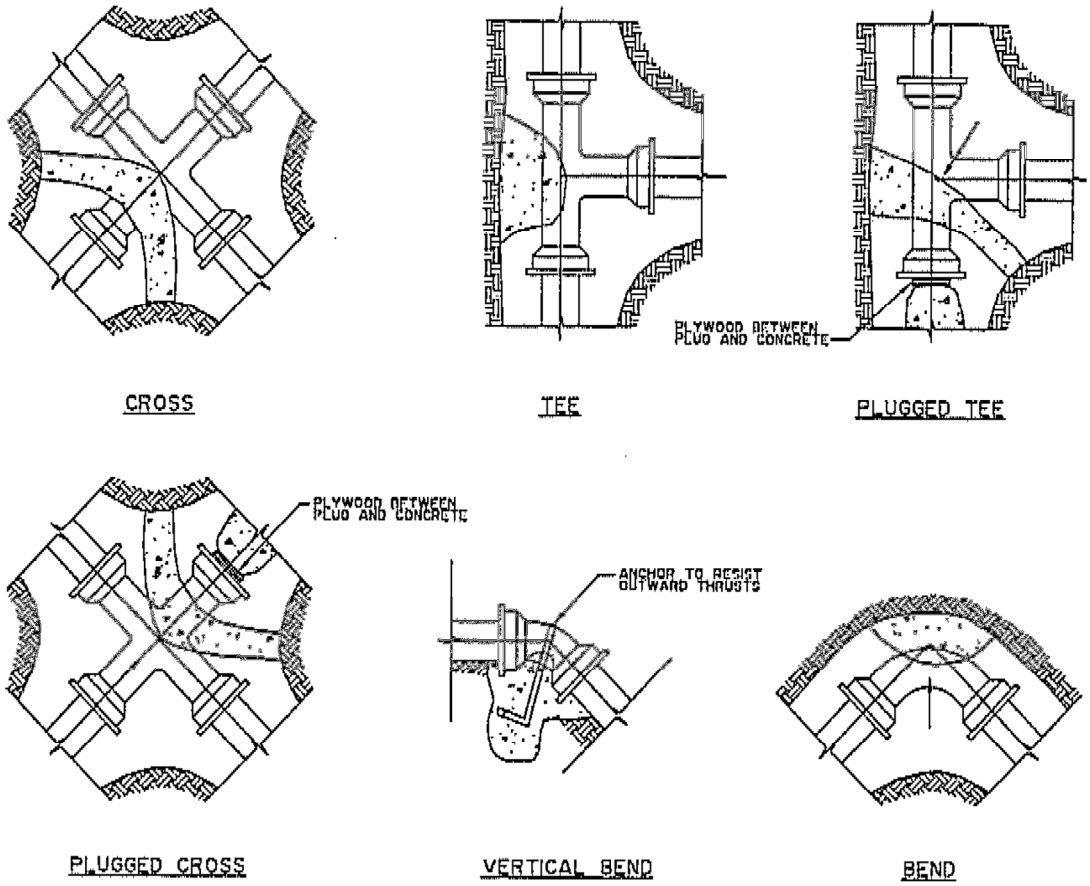

TYPICAL THRUST BLOCK DETAILS
(No Scale)

MINIMUM BEARING AREA OF THRUST BLOCK IN SQUARE FEET				
FITTING SIZE	TEE, DEAD END & 90° BEND	45° BEND	22 1/2° BEND	11 1/4° BEND
4"	1.3	0.7	0.4	0.2
6"	3.0	1.6	0.8	0.4
8"	5.3	2.9	1.5	0.7
10"	8.3	4.5	2.3	1.2
12"	12.0	6.5	3.3	1.7
16"	21.3	11.5	5.9	3.0
18"	27.0	14.6	7.4	3.7
24"	48.0	26.0	13.2	6.6

Based On 2000 lb./ft. Lateral Soil Bearing Pressure.

All Blocks To Bear Against Undisturbed Earth.

NOTE: Service clamp not required where small size service lines connect to large C.I.P. and three threads of tne corporation stop make contact with the pipe wall.

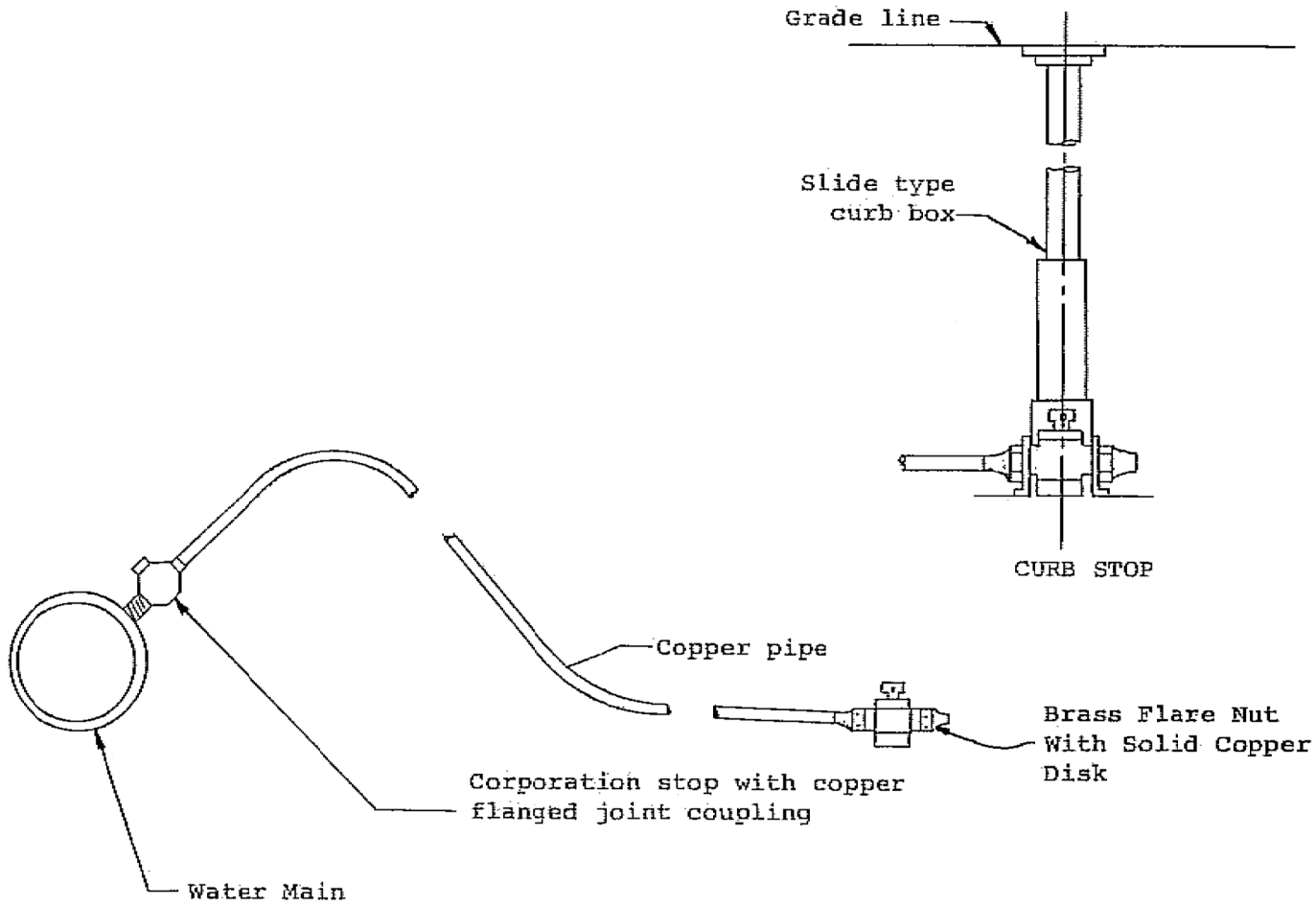

TYPICAL CORPORATION STOP AND CURB STOP
NO SCALE

NOTE: SETTING FOR ALL VALVES

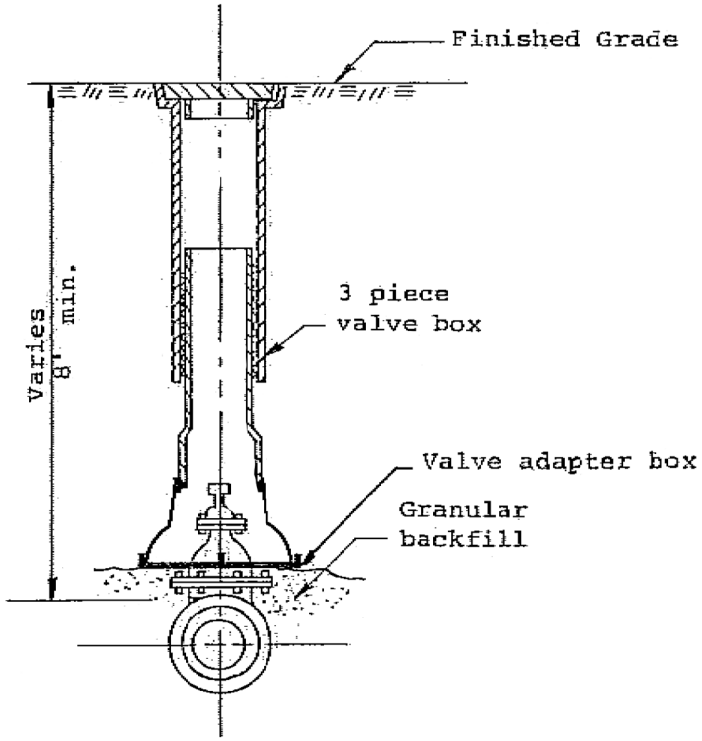

NOTE: SETTING FOR VALVES IF SPECIFIED

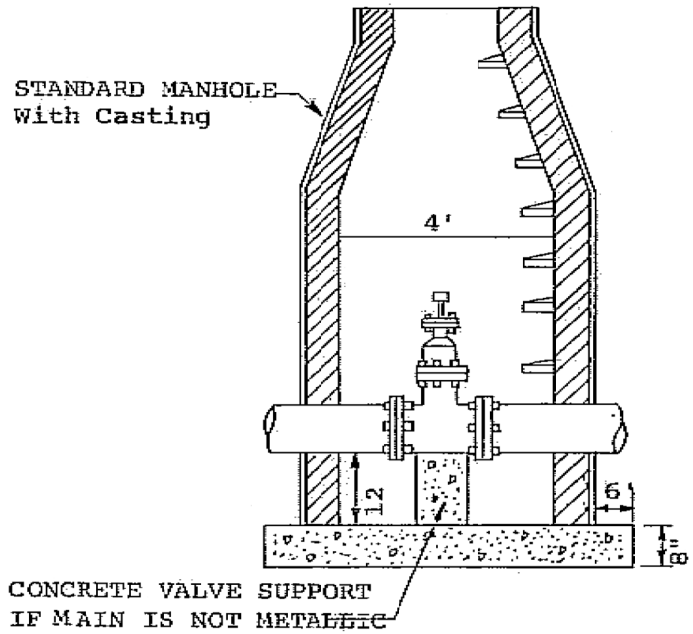

TYPICAL GATE VALVE SETTINGS

No Scale

TYPICAL FIRE HYDRANT SETTING

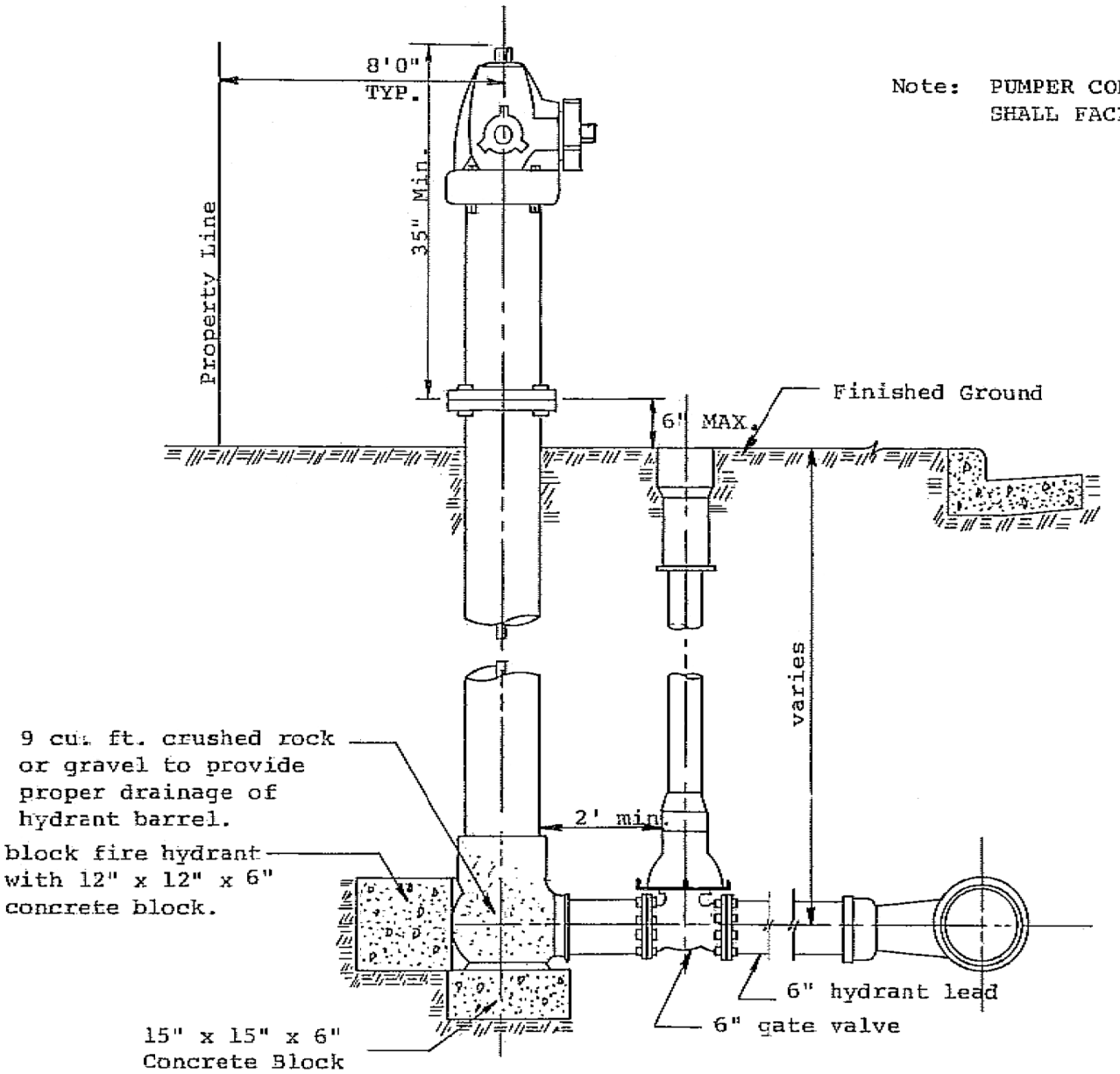

Note: PUMPER CONNECTION SHALL FACE THE STREET.

TYPICAL CURB DETAILS

(OTHER CONFIGURATION MAY BE SUBMITTED TO ENGINEER FOR APPROVAL)

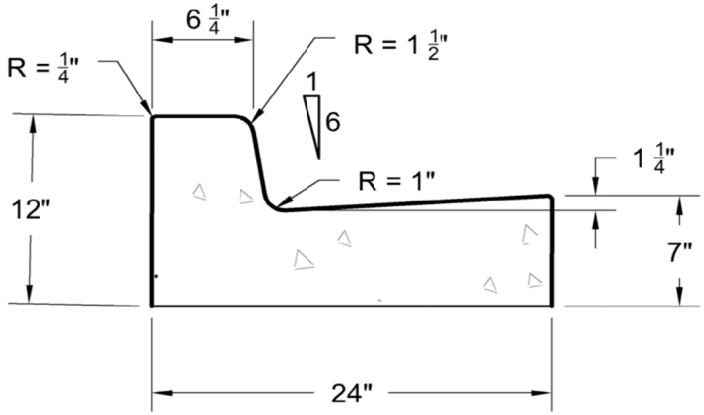

SECTION A

NOTE:
CONCRETE CURB AND GUTTER MAY ALSO BE CONSTRUCTED AS PER NDDOT STANDARD DRAWING D-748-1

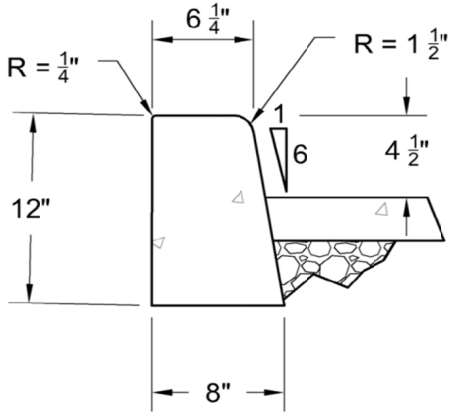

SECTION B

C O N C R E T E C U R B J O I N T S

NOTE:
CONCRETE CURB JOINTS SHALL BE
CONSTRUCTED AS PER ND DOT STANDARD
DRAWING D-748-1

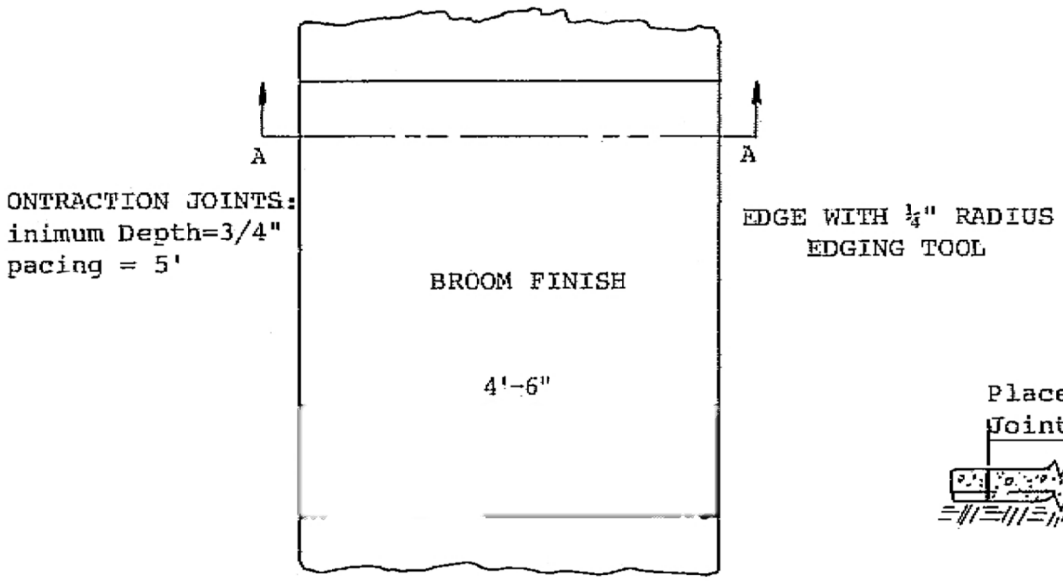

PLAN VIEW

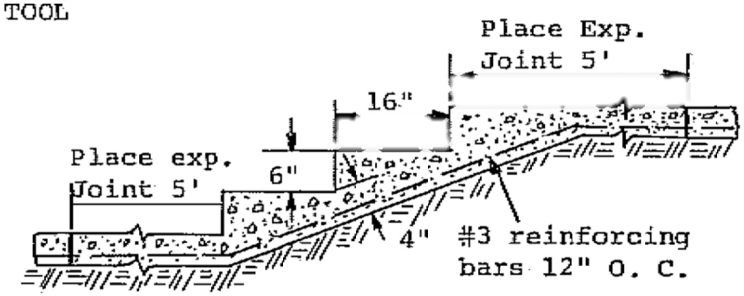

SIDEWALK STEPS

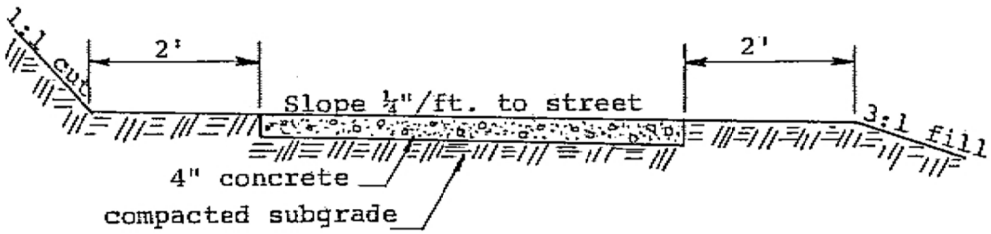

SECTION A-A

T Y P I C A L S I D E W A L K

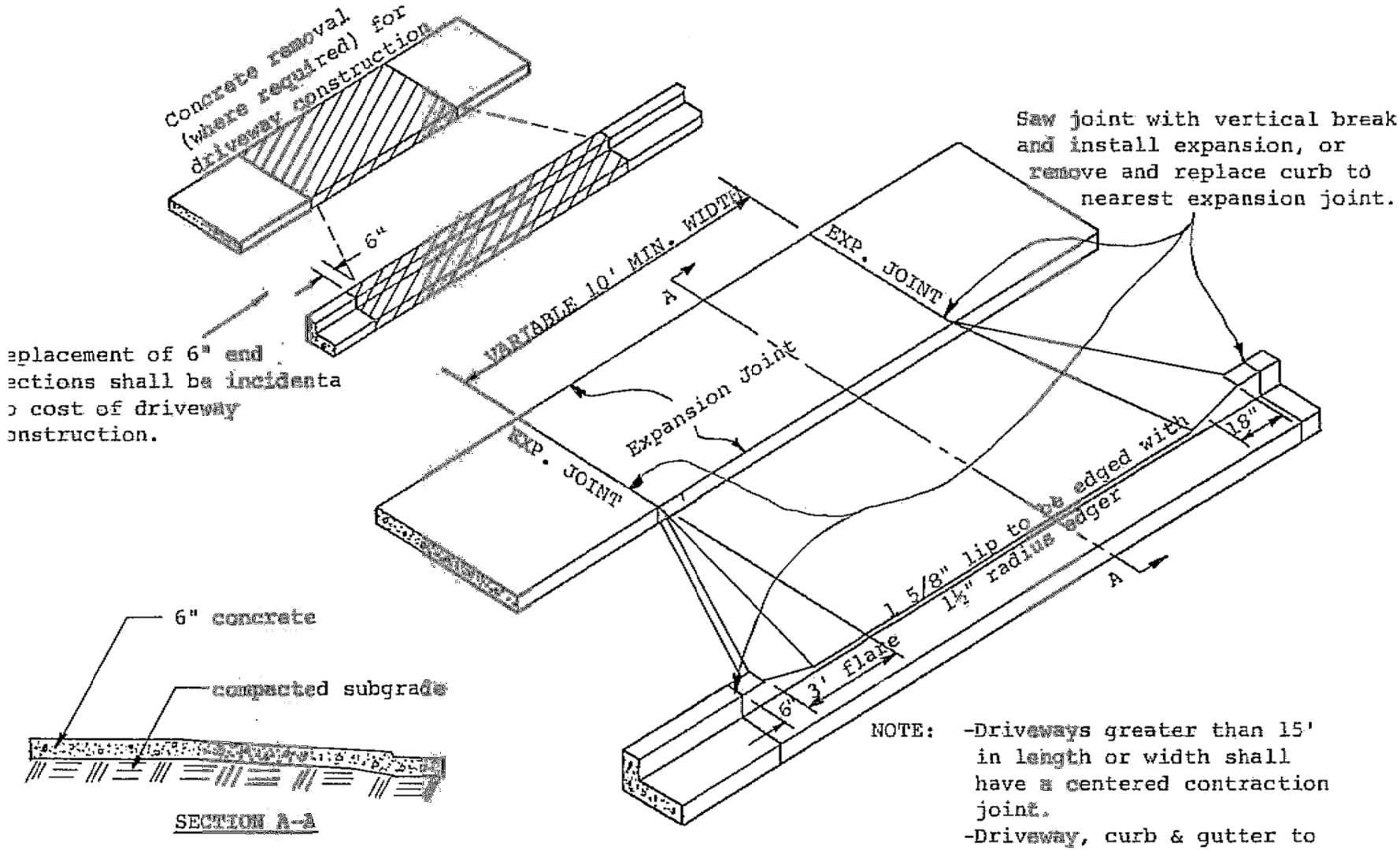

NOTE: -Driveways greater than 15' in length or width shall have a centered contraction joint.
-Driveway, curb & gutter to be poured simultaneously.

TYPICAL DRIVEWAY
(BOULEVARD GREATER THAN 4')

NOTE: - Driveways greater than 15' in length or width shall have a centered contraction joint.
- Driveway, Curb & Gutter to be poured simultaneously.

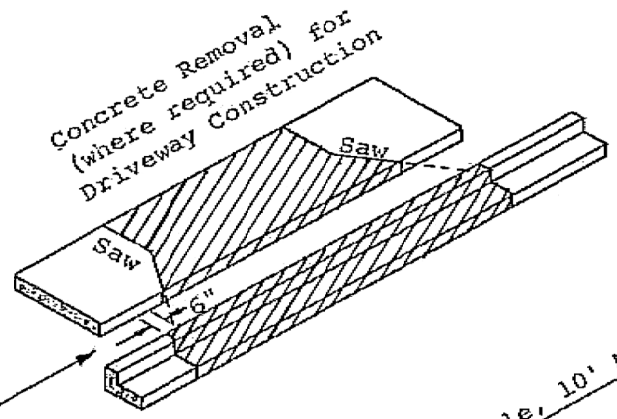

Replacement of 6" end sections shall be incidental to cost of driveway construction.

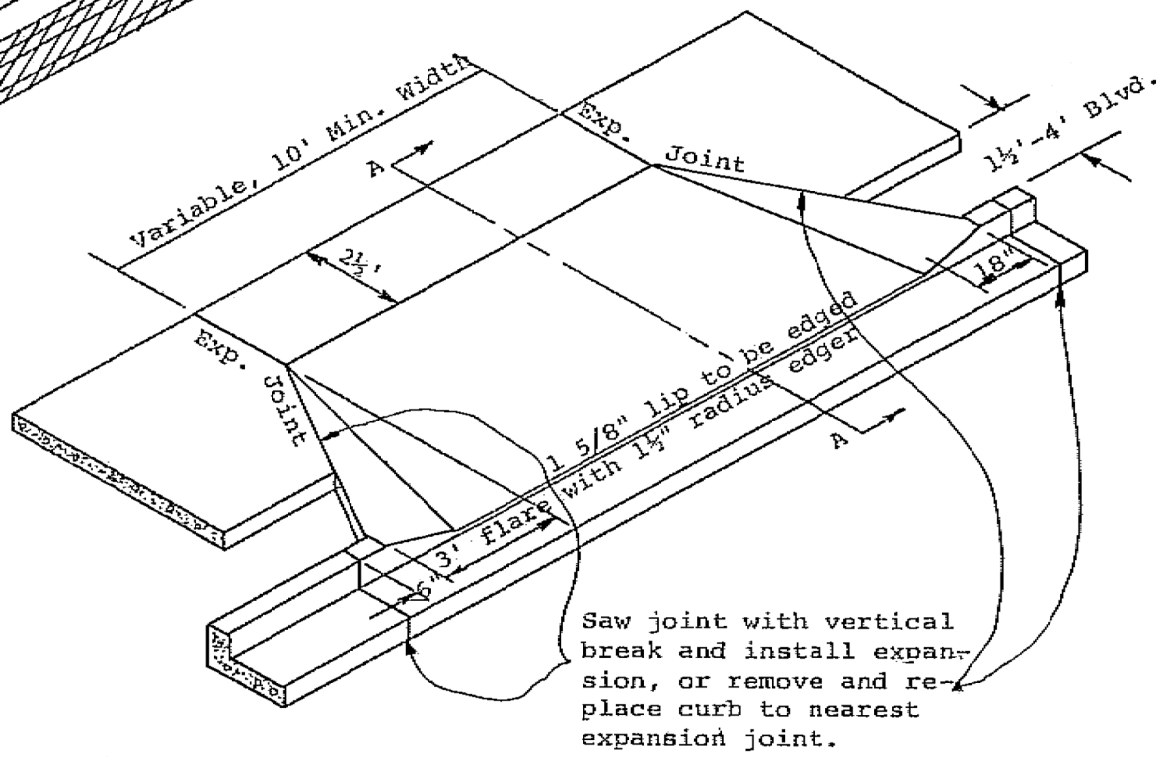

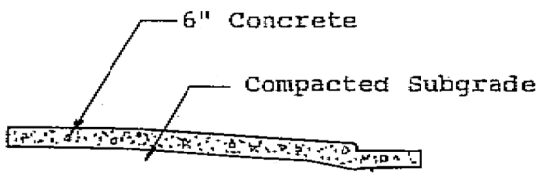

SECTION A-A

TYPICAL DRIVEWAY (1½' to 4' BOULEVARD)

-Driveway, Curb & Gutter to be poured simultaneously.

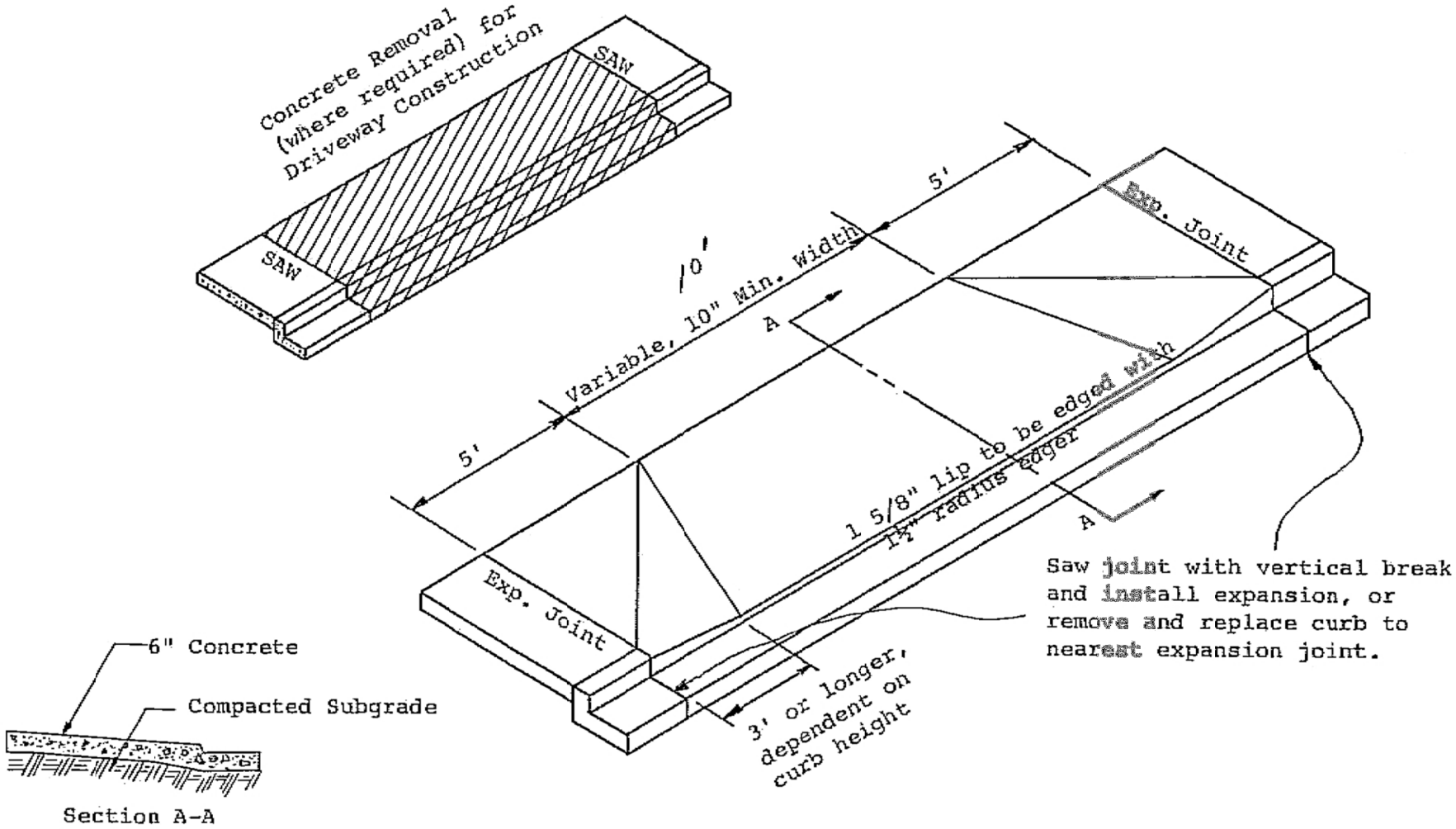

TYPICAL DRIVEWAY
(0 to 1½ ft. boulevard)

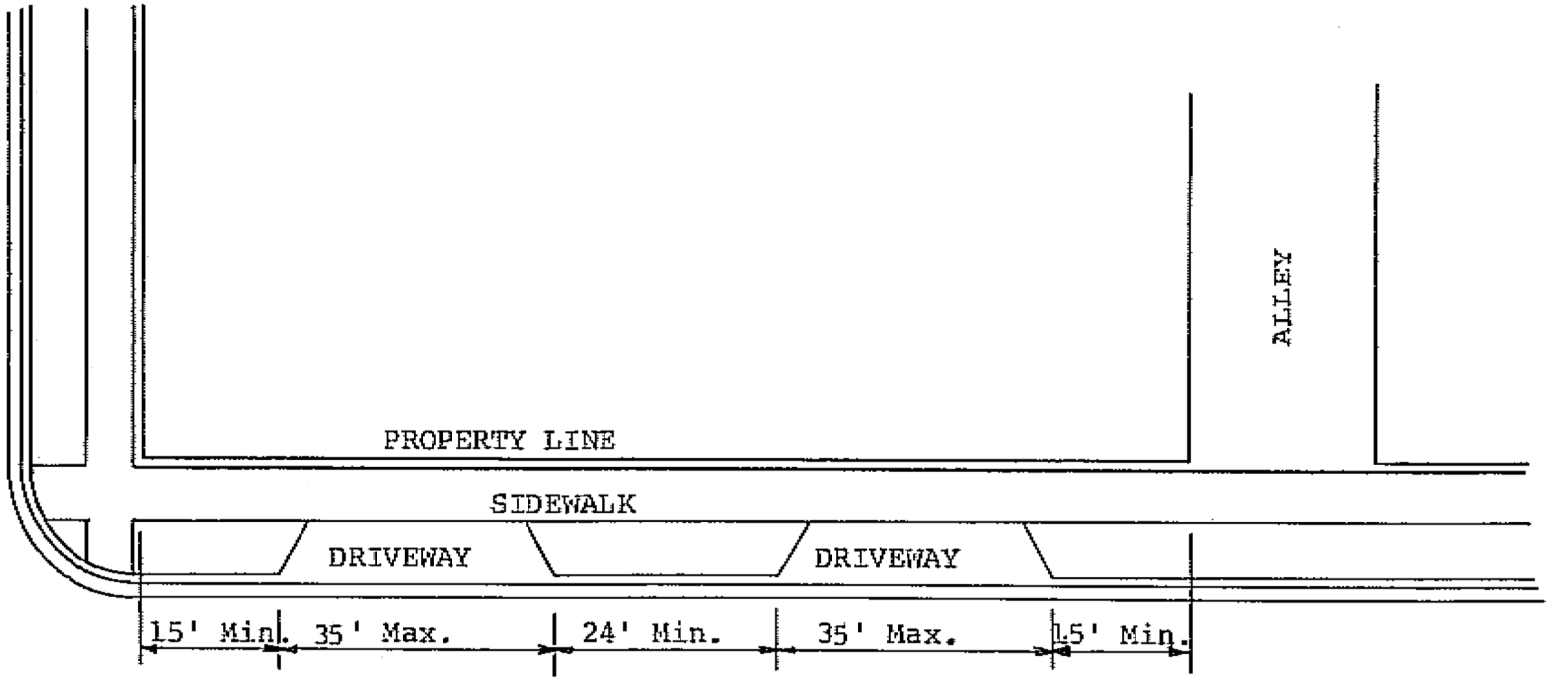

D R I V E W A Y P L A C E M E N T

CURB RAMP DETAILS

D-750-3

+More Right of Way ⟷ Less Right of Way-

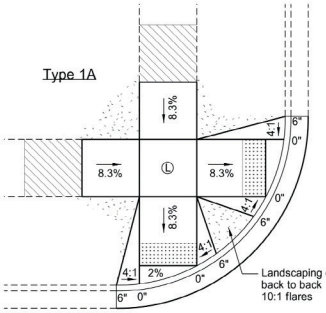

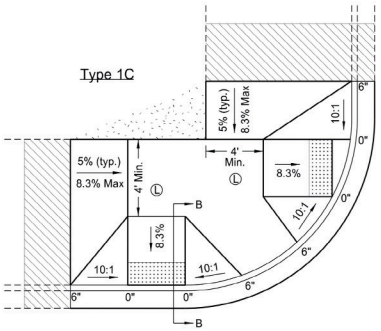

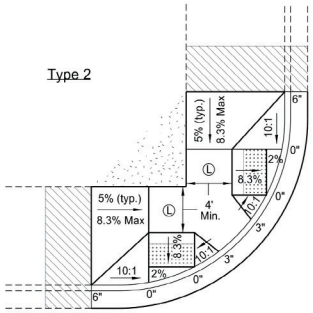

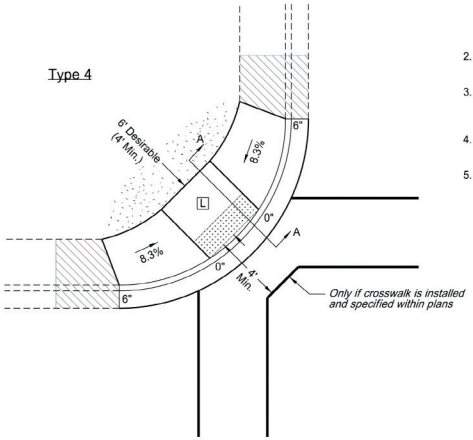

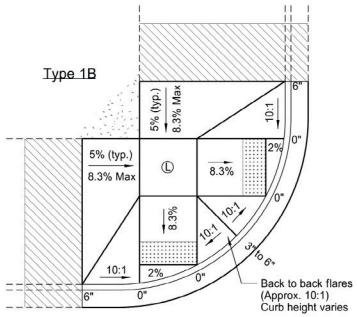

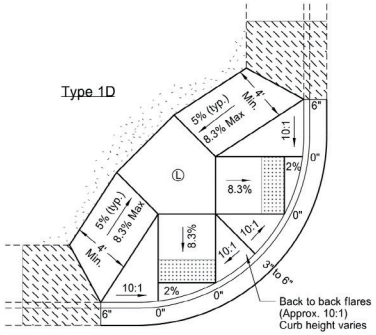

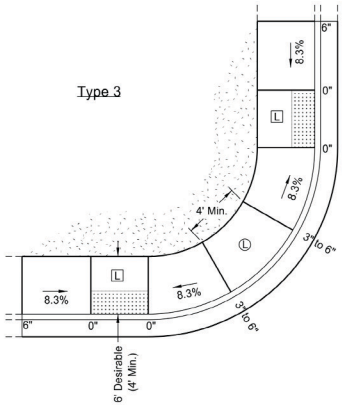

NOTES:

1. Ramp width is the useable portion of the ramp, excluding flares.

   Match curb ramp width to existing sidewalk width. (4' minimum.)

   Match ramp width to existing shared use path width.

   Maximum ramp length is 15'.
2. Desirable landing size is 5' x 5' or larger. Minimum landing size is 4' x 4' with a max 2% slope in any direction.
3. Match detectable warning panel width to ramp width. Radial panels allowed. Locate detectable warning panel within the lower landing.
4. Provide a continuous 4' min width pedestrian access route with max 2% concrete cross slope, excluding flares.
5. Modify existing ground slope with landscaping, as needed. If not possible, such as adjacent buildings, use a vertical curb as shown in the detail below. The Engineer will measure curb at the unit price bid for "Curb - Type I" per lineal foot.

LEGEND:

- : Detectable Warning Panel
- : Landscaping
- : Transitional tie-in segment if needed for retrofits. Max grade slope 8.3%.
- Ⓛ : Upper Landing
- Ⓛ : Lower Landing
- 0", 3", or 6" : Curb Height
- 8.3% : All slopes shown are max grades. Use flatter slopes when possible.

Median Refuge Islands (Cut-Through)

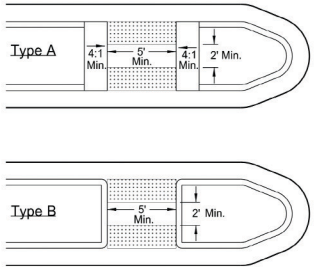

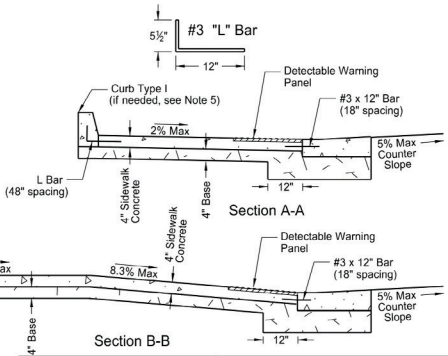

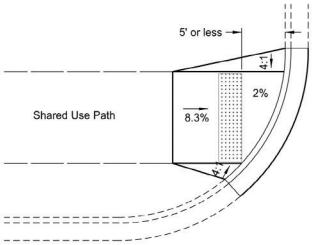

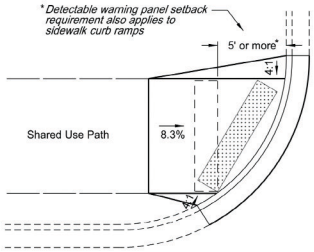

Concrete Apron for Shared Use Paths with Curb and Gutter

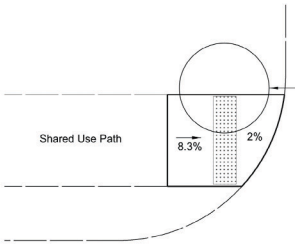

Concrete Apron for Shared Use Paths without Curb and Gutter

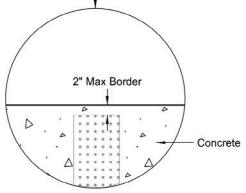

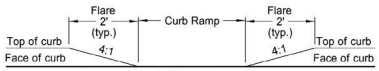

4:1 Flares
(Use when flare is adjacent to landscaping)

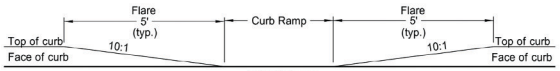

10:1 Flares
(Use when flare is adjacent to sidewalk)

NORTH DAKOTA DEPARTMENT OF TRANSPORTATION	
11-26-13	
REVISIONS	
DATE	CHANGE
10-17-17	Updated to active voice.

This document was originally issued and sealed by Roger Weigel, Registration Number PE- 2930, on 10-17-2017 and the original document is stored at the North Dakota Department of Transportation

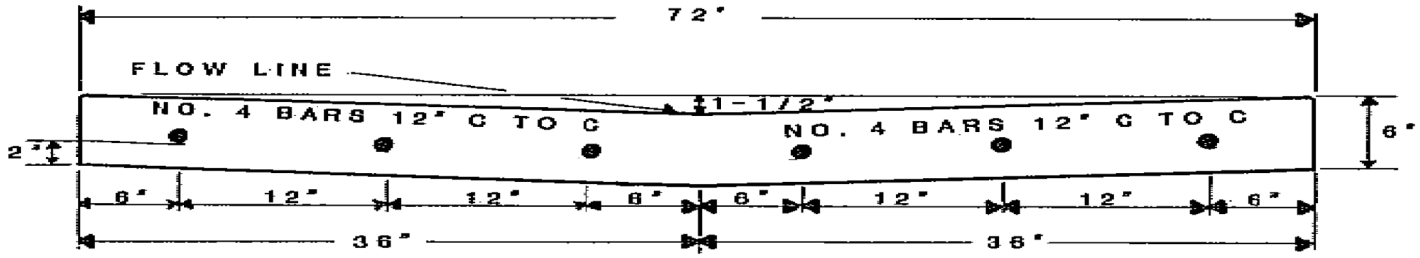

72" CONCRETE VALLEY GUTTER

DRAINAGE CHANNEL

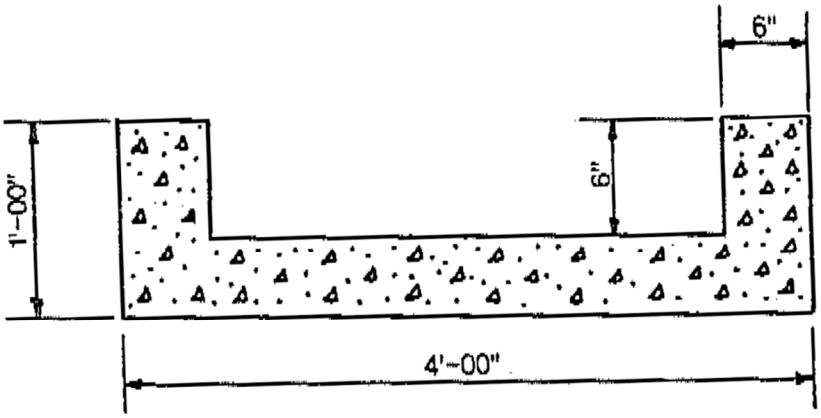

finish with steel roller
(3-5 ton min.)

no seal coat required

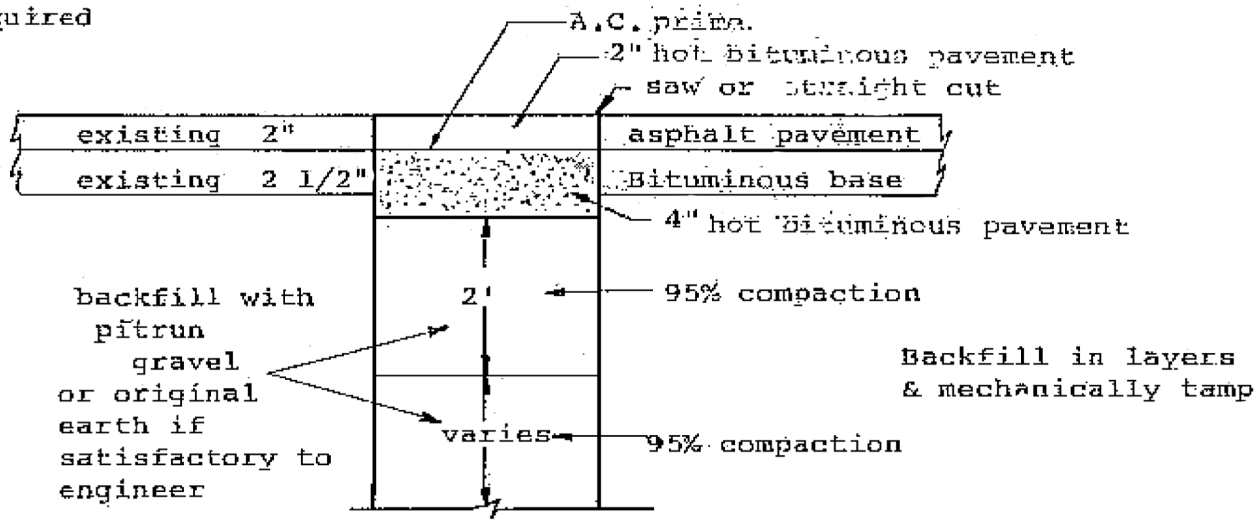

Work area must be left free of all dirt and debris

SECTION

NOTE: The trench shall be backfilled with the original excavated material unless otherwise specified by the Engineer. If gravel is required because of poor soil conditions; it shall be pit-run gravel with sufficient binder to facilitate compaction. Back-fill gravel or original excavated material shall be compacted to at least 95% of maximum density at optimum moisture content (Standard A.A.S.H.O.) the top two (2) feet of the trench shall be compacted to at least 95% of maximum density.

TYPICAL HOT BITUMINOUS PAVEMENT PATCH DETAIL

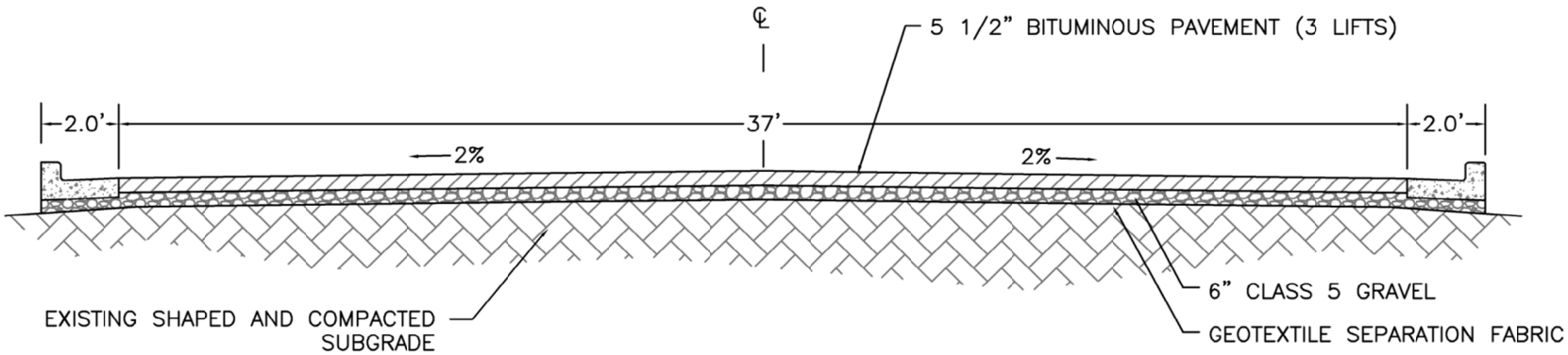

TYPICAL SECTION NEW RESIDENTIAL ROADWAY

NO SCALE